Early Greek Mathematics: The Heroic Age

Douglas Pfeffer

Table of contents

Outline

The Era

On Greek mathematics in the fifth century BCE historians Uta C. Merzbach and Carl B. Boyer write,

"Perhaps never again was any age to make so bold an attack on so many fundamental mathematical problems with such inadequate methodological resources."

- It is this age that is now referred to as the Heroic Age of mathematics.

Athens

- The fifth century BCE opened with the defeat of the Persian invaders
  - Afterward, the 'Age of Pericles' soon began along with incredible accomplishments in literature and art
- The prosperity and intellectual atmosphere of Athens drew scholars from all over the Greek world
  - The mathematicians of this age inherited the works of Thales and Pythagoras, but predate much of Plato (427 BCE), and all of Aristotle (384 BCE) and Euclid (285 BCE):
    - Archytas of Tarentum (428 BCE)
    - Hippasus of Metapontum (400 BCE)
    - Democritus of Thrace (460 BCE)
    - Hippias of Elis (460 BCE)
    - Hippocrates of Chios (430 BCE)
    - Anaxagoras of Clazomenae (428 BCE)
    - Zeno of Elea (450 BCE)

Athens


ADRIATIC SEA
AEGEAN SEA
PROPONTIS
DODECANESE
CYCLADES
Byzantium
Astakos
Perinthos
Kios
Proconnesus
Cyzicus
Abdera
Maroneia
Amphipolis 436
Thasos
465/3
Samothrace
Cheronese
Lampsacus
Abydos
Eion 476/5
Stageira
Olynthus
Methone
Imbros
Lemnos
Tenedos
Potidaea 432
Torone
Mende
Assos
Halonnesus
Lesbos
Mytilene
Ikkos
Skiathos
Peparethos
Kymi
Phocaea
Kerkyra
Oreos 446
Euboea
Skyros 469
Chios
Erythrae
Clazomenae
Chalcis 446
Eretria
Ephesus
Samos
440
Priene
Leucas
LOCRIS
Karystos 469/8
ATTICA
Ikaros
Miletus
Iasos
Athens
Andros
Salamis
Tinos
Patmos
Halicarnassus
Cephallenia
Keos
Mykonos
Leros
Kalymnos
Aegina 456
Kythnos
Delos
Naxos
468
Cos
Cnidus
Zakynthos
Seriphos
Paros
Siphnos
Amorgos
Nisyros
Telos
Rhodes
Kameiros
Los
Sikinos
Astypalaia
Lindos
Melos
Rhodes
Anafi
Thera
Karpathos
Kythira
The Athenian Empire at the brink of the Peloponnesian War (431 BCE)
Aegina (456)
City-state (date captured)
Cleruchy (Athenian garrison) (date)
Rebellion against Athens (date)
Athenian territory
Territory of allied city-states
Thrace district

Anaxagoras

Anaxagoras of Clazomenae (510 - 428 BCE)
Part of a fresco in the portico of the National University of Athens.

Anaxagoras

- Anaxagoras came to Athens in 480 BCE with the nature of the universe on his mind
  - He purported that the sun was not a deity, but a huge red-hot stone.
  - Additionally, the moon was actually an inhabited earth that borrowed its light from the sun
- His teachings were shared with his countrymen through his book *On Nature* – available for one drachma
- Was primarily a natural philosopher, but his inquisitive mind led him to pursue some mathematical problems
  - His desire 'to know' is believed to have been inherited from Thales and Pythagoras and then disseminated and shared with all of Greece

Outline

Three Classic Problems

- At some point Anaxagoras was imprisoned for his anti-religious views
- According to Plutarch (c. 45 CE), Anaxagoras occupied himself by attempting to 'square the circle'
  - This reference is the earliest known source of the problem
  - Specifically, given a circle, construct a square with the same area using only straight-edge and compass
  - Of note is that this mathematical endeavor was clearly a theoretical game and not of a practical nature.
- Of note: Such 'constructible numbers' can be identified as those numbers which can be represented by a finite number of additions, subtractions, multiplications, divisions, and finite square roots of integers

Modern Segue: Squaring the Circle

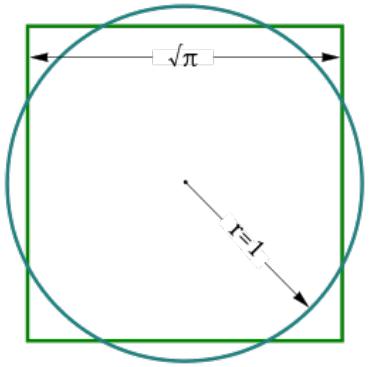

- Evidently, to solve this problem, one needs to construct $\sqrt{\pi}$.
- It can be shown that this is possible iff π is constructible
- In 1837, Pierre Wantzel showed that such constructible lengths were algebraic.
- In 1768, Johann Heinrich Lambert conjectured that π was not algebraic (what would be called a transcendental number).
- In 1882, Ferdinand von Lindemann proved the transcendence of π and thus the impossibility of 'squaring the circle'

Pericles

Pericles

- Led Athens from 461 to 429 BCE
  - Huge proponent of arts and literature
  - Led large projects that included the construction of the Parthenon and other suviving constructs on the Acropolis
- Anaxagoras was his teacher and mentor
  - Eventually, it was Pericles that successfully advocated for Anaxagoras' release from prison
- Died in 429 BCE due to a widespread plague
  - Of interest is that Anaxagoras died in 428 BCE
  - Plato was born in 427 BCE

The Plague and Doubling the Cube

- The story goes that a group of Athenians went to the oracle of Apollo and asked how to cure the plague
  - Their answer was that the cubicle altar to Apollo had to be doubled
  - Reportedly, the Athenians doubled the dimensions of the altar, but this did not stop the plague
- The 'correct' answer to the request was to, given a cube, construct another cube with double the volume
  - In particular, this is the question of 'doubling the cube' using only straight-edge and compass
- Worth noting that utilizing modern Galois Theory, the impossibility of Doubling the Cube has been established.

Trisecting the Angle

- The third problem of Greek antiquity is 'trisecting the angle'
  - Given an arbitrary angle, construct an angle one-third as large using only straight-edge and compass

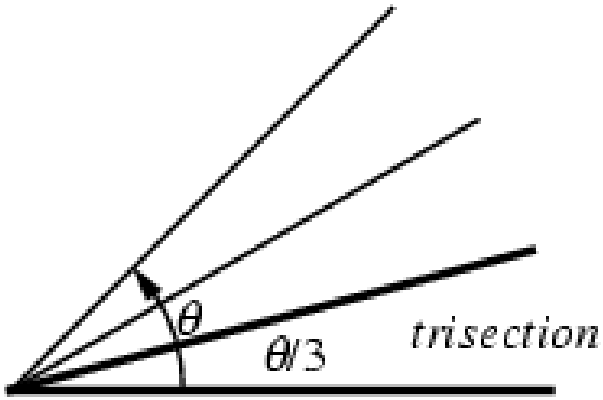

- As with Doubling the Cube, modern Galois Theory has established the impossibility of arbitrary angle trisection.

Hippocrates

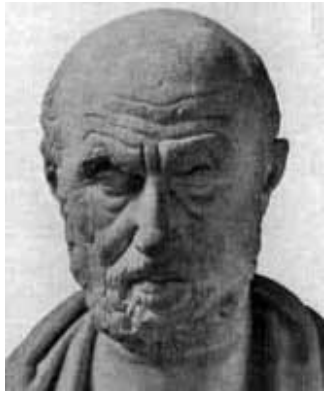

- Boring in Chios, he is not to be confused with his contemporary Hippocrates of Cos, a famed physician
- In 430 BCE, he left for Athens to be a merchant
  - Aristotle reports that he lost his wealth due to fraud, others report he lost it due to pirates
  - He quit merchanting and turned to the study of geometry
    - Proclus' writings claim Hippocrates wrote *Elements of Geometry* a full century before Euclid
    - Aristotle also claims such a book existed

Lunes

- In 520 CE, philosopher Simplicius claimed to have written a literal copy of Eudemus' text *History of Mathematics* in which he wrote about Hippocrates' work on the quadrature of lunes
  - Quadrature refers to area
  - A lune is a figure bounded by two circular arcs of unequal radii

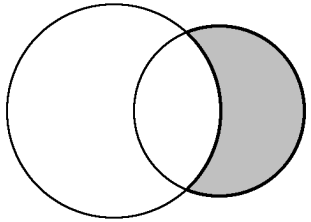

- Work in this direction was an effort to make progress on Squaring the Circle

Lunes

- To begin with, Hippocrates established the following theorem
  - The areas of two circles are to eachother as the squares of their diameter
- This result can easily be refined to semicircles
- Eudemus believed Hippocrates gave a proof of this fact c. 430 BCE
- Eventually, this theorem was included in Euclids *Elements* (Book XII, Proposition 2) and the proof there is attributed to Eudoxus
  - Eudoxus lived after Hippocrates
  - The proof, if given by Hippocrates, would be one of the first instances of proof by contradiction.

Quadrature of a Lune

- Hippocrates established a construction for calculating the area of a particular class of lunes:

Theorem

Given a lune AEBF, its area is equal to the triangle ABO.

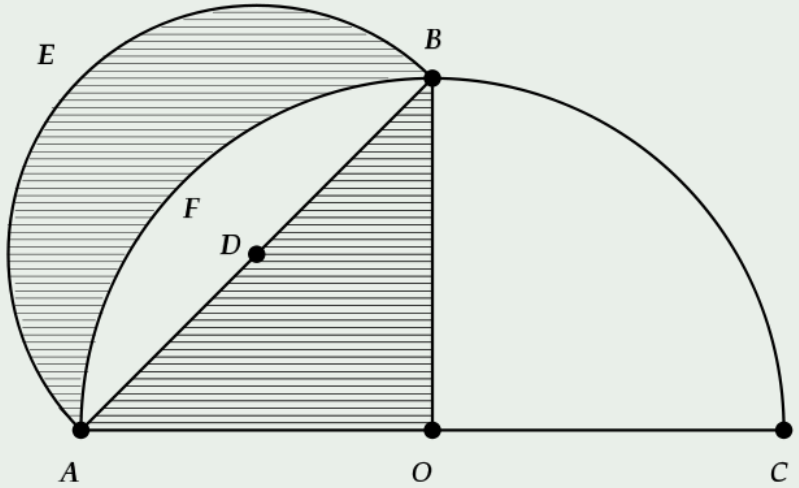

Why lunes?

- Many mathematicians of the time were conducting research on the quadrature of lunes
- The motivation was an attempt to square the circle
  - It was known one could square a trapezoid
  - It was also known that, given the following construction:

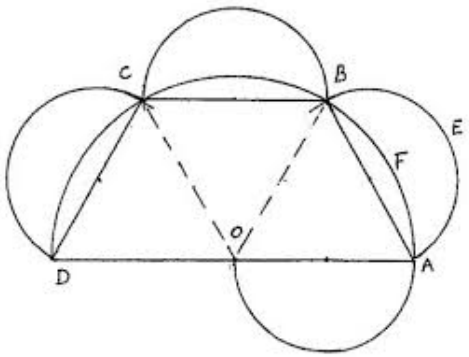

$$\text{Area(trapezoid)} = 3 \cdot \text{Area(Lune } AEBF) + \text{Area(Semicircle } AEB)$$

Why lunes?

- Therefore, if one could square *these* lunes, one could square the semicircle and hence the circle
- Note that these lunes differ from the Lune of Hippocrates
- Unfortunately, these trapezoidal lunes are not constructible by straight-edge and compass
- Regardless, these attempts by Greek mathematicians show an incredible amount of tenacity and ingenuity

Hippias of Elis

- In the later part of the 400s BCE, the Sophists appeared in Athens
  - A group of intellectuals and teachers that supported themselves by tutoring their fellow citizens
    - Notably different from the Pythagorean order that forbade themselves from accepting payments
  - One such sophist was Hippias of Elis
    - According to Plato, Hippias claimed to have made more money than any other two sophists combined
    - Socrates described Hippias as handsome and learned, but boastful and shallow
    - Unfortunately, none of his work has survived, only references

Trisectrix of Hippias

- Owed to him is the introduction to studying the first curve beyond the circle and the straight line:

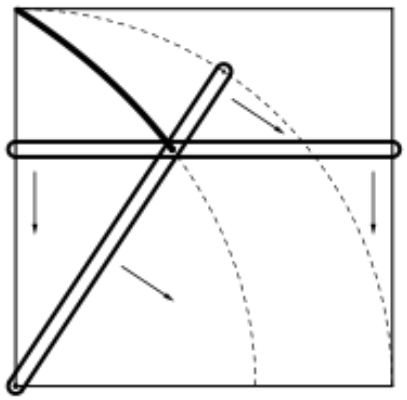

- Referred to as the *trisectrix* due to its aid in trisecting an angle
  - Unfortunately, the trisectrix of Hippias cannot be constructed using only a ruler and compass as the above picture shows
- Due to its help in doubling the cube, it is sometimes referred to as the *quadratrix* of Hippias

Trisectrix of Hippias

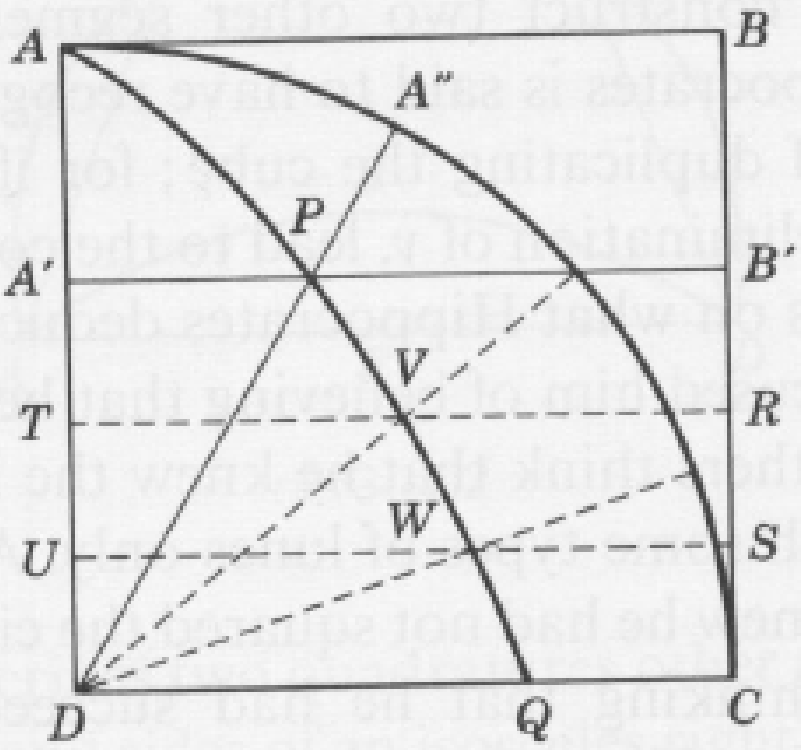

FIG. 5.5

Philolaus and Archytas of Tarentum

- Pythagoras died in 500 BCE
  - Tradition has it that he left behind no written works, but his ideas were carried on by his eager disciples
- The Pythagorean school in Croton was abandoned when a political group in Sybaris surprised and murdered the leaders
  - Refugees escaped and then spread Pythagoreanism all throughout the Greek world
- Philolaus of Tarentum began documenting the work produced by the Pythagorean Order
  - Supposedly, it is through his book that Plato came to learn much of the Order
- Philolaus embraced the number mysticism and tried to pass the ideology onto his own students
  - One such student was Archytas of Tarentum.
  - Unfortunately for Philolaus, Archytas did not inherit his religious and mystical fervor

Archytas

Archytas

- Archytas wrote prolifically on arithmetic, geometric, and subcontrary means and their application to music
  - He is credited as the one who changed subcontrary to harmonic
- In addition to music, he cared deeply for teaching. He is credited for establishing the curriculum of mathematics:
  - Arithmetic (numbers at rest)
  - Geometry (magnitudes at rest)
  - Music (numbers in motion)
  - Astronomy (magnitudes in motion)
- These four subjects, along with grammar, rhetoric, and dialects would later constitute the 7 Liberal Arts in ancient Greece.

Archytas

- Recall that the Mesopotamian algorithm for computing $\sqrt{a}$ was sometimes attributed to Archytas
  - Most agree, however, that his knowledge of this algorithm was gained via the Mesopotamians
- An original contribution of his, however, is his 3-dimensional solution to doubling the cube: In modern analytic geometric terms,
  - Consider the surfaces

$$x^2 = y^2+z^2, \qquad 2x = x^2+y^2, \qquad \text{and} \qquad (x^2+y^2+z^2)^2 = 2(x^2+y^2).$$

- The x-coordinate of their intersection is exactly $\sqrt[3]{2}$ – the value needed to double the cube.

Outline

Incommensurability

- A fundamental tenet of Pythagoreanism is 'arithmo' – that the intrinsic properties of whole numbers and their ratios are sufficient to explain the world
  - Writings of Plato show that the Greek mathematical community was utterly stunned when, in geometry, it was found was ratios such as the diagonal of a square to its side is incommensurable
    - That is, the existence of irrational numbers
- Unfortunately, sources for the origin of this realization are shaky
  - Writings of Aristotle suggest that a proof existed of the irrationality of a unit squares diagonal
    - He suggested that it utilized the Pythagorean theorem and the properties of even and odd numbers

Irrationality of $\sqrt{2}$

- The proof in question is easy enough to reconstruct:
  - Suppose you have a square with side-length s and diagonal d.

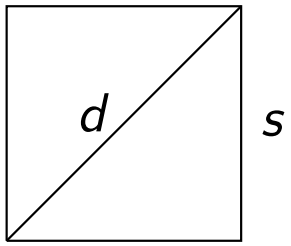

  - If the ratio $\frac{d}{s}$ is commensurable, then $\frac{d}{s} = \frac{p}{q}$ where p and q are integers with no common factors.
  - By the Pythagorean theorem, $d^2 = 2s^2$ so that $2 = \left(\frac{d}{s}\right)^2 = \frac{p^2}{q^2}$.
    - Equivalently, $p^2 = 2q^2$ and therefore p^2 (and hence p) must be even.
  - Consequently, since p and q share no common factors, q must be odd.

Irrationality of $\sqrt{2}$

- Since p is even, we can rewrite it as $p = 2r$.
- Therefore $p^2 = 2q^2$ becomes $4r^2 = 2q^2$
  - Equivalently, $q^2 = 2r^2$.
- But now q^2 (and hence q) is now even!
- Since the integer q can't be both odd and even, we have reached a contradiction.
  - Thus, our assumption that d and s are commensurable must be false.

Zeno of Elea

- The Pythagorean order believed that "all is number" and that all could be explained through their multiplicity and division
  - In particular, they attempted to explain reality and motion via numbers
  - Recall that to them 'number' meant whole numbers
- Around 450 BCE, the philosophical group Parmenides of Elea came about and began to oppose the Pythagorean philosophy
  - They argued that reality was one, change is impossible, and existence is timeless, uniform, and unchanging.
  - One such Eleatic was Zeno of Elea

Zeno of Elea

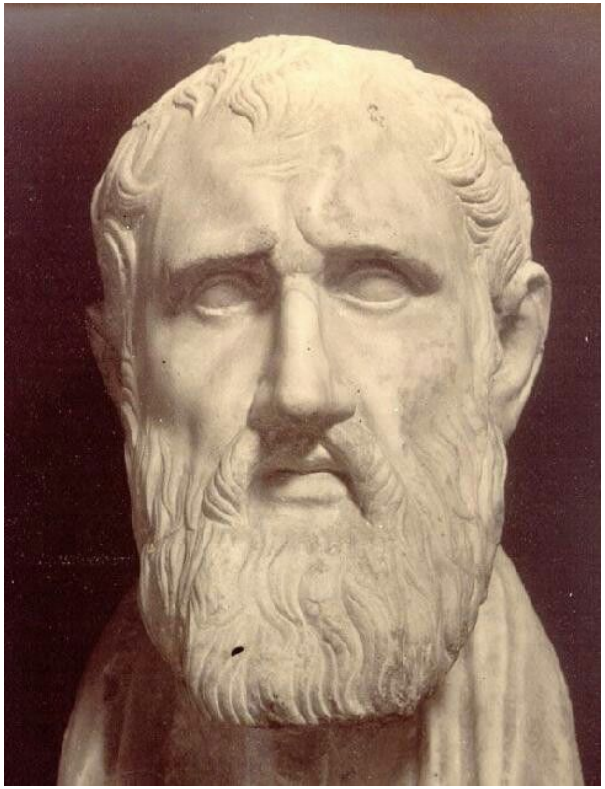

Zeno of Elea

- Pythagoreans believed that all of space and time were simply a sequence of fixed points and instants.
  - Essentially, they believed in the subdivisibility of space and time
- The Eleatic school countered this philosophy by offering various paradoxes: For example,
  - the Dichotomy
  - the Achilles
- The result of these paradoxes was to show that 'motion' was impossible under the assumption that space and time could be subdivided by whole numbers

Paradoxes

- The influence that these paradoxes and incommensurability had on the Greek world was profound
- Early Greek mathematics saw magnitudes represented by pebbles and other discrete objects
  - By Euclids time, however, magnitudes had become represented by line segments
- 'Number' was still a discrete notion, but the early ideas of continuity was very real and had to be treated separately from 'number'
  - The machinery to handle this came through geometry
- As a result, by Euclids time, geometry ruled the mathematical world and not number.

Deductive Reasoning

- The origins of deductive reasoning are Greek, but no one is sure who began it
  - Some historians contend that Thales, in his travels to Egypt and Mesopotamia, saw incorrect 'theorems' and saw a need for a strict, rational method to mathematics
  - Others claim that its origins date to much later with the discovery of incommensurability
- Regardless, by Plato's time, mathematics had undergone a radical change

Changes to Mathematics

- The dichotomy between number and continuous magnitudes meant a new approach to the inherited, Babylonian mathematics was in order
  - No longer could 'lines' be added to 'areas'
  - With magnitudes mattering, a 'geometric algebra' had to supplant 'arithmetic algebra'
- Most arithmetic demonstrations to algebra questions now had to be reestablished in terms of geometry
  - That is, redemonstrated in the true, continuous building blocks of the world
- The geometric 'application of areas' to solve quadratics became fundamental in Euclids *Elements*.

Geometric Revolution

- Some examples of this geometric reinterpretation of algebra are the following:
  - $a(b+c+d) = ab + ac + ad$
  - $(a+b)^2 = a^2 + 2ab + b^2$
- This reinterpretation, despite seeming over complicated, actually simplified a lot of issues
- The issues taken with $\sqrt{2}$ were non existent: If you wanted to find x such that $x^2 = ab$, there was now a geometric way to 'find' (read: construct) such a value
  - Incommensurability was not a problem anymore.

Conclusions

- These heroes of mathematics inherited the works of Thales and Pythagoras and did their best to wrestle with fundamental, far-reaching problems
  - The tools they had at their disposal were limited – a testament to their intellectual prowess and tenacity
- The Greek problems of antiquity, incommensurability, and paradoxes illustrate just how complicated the mathematical scene was in Greece during the fifth century BCE.
- Moving forward, geometry would form the basis of mathematics and deductive reasoning would flourish as a way toward mathematical accuracy