Ulanowicz, R.E. 1989. A generic simulati
model for treating incomplete sets of da
pp. 82-89. In: F. Wulff, J.G. Field, a
K.H. Mann (eds.) Network Analysis in Mar
Ecology. Springer-Verlag, Berlin.

Chapter 4

A GENERIC SIMULATION MODEL

FOR TREATING INCOMPLETE SETS OF DATA

Robert E. Ulanowicz
Chesapeake Biological Laboratory
University of Maryland
Solomons, Maryland 20688-0038
USA

INTRODUCTION

As the preceding chapters in this volume have amply demonstrated, much useful knowledge concerning ecosystem structure and function can be obtained by subjecting estimated networks of material and energy flows in marine systems to the analytical techniques described in Kay *et al.* (1989, this volume). Usually, the data required for the network analysis techniques are identical to those necessary to begin the simulation modelling of these same systems-namely, the magnitudes of the stocks and flows. (Ducklow *et al.* 1989, this volume)

To a limited extent the activities of network analysis and simulation modelling can be mutually beneficial exercises. For example, network analysis can provide in-depth analysis of the output from conventional simulation models. Conversely, those simulation techniques with a minimum of *a priori* assumptions can be used to render incomplete or unbalanced network data sets suitable for the analyses described in this book. In addition, there are those practitioners of network analysis who cannot resist the temptation to indulge in "what if" types of questions, e.g.,"What might happen to the fish stocks in my system if the oyster biomasses were doubled?" While the answers to such questions should be sought primarily among the outputs from the network analyses (i.e., among the data themselves), it is an easy enough task to provide the investigator with a very simple simulation package to indulge his/her curiosity. (A strong word of caution is given to those who would use the simulation in this way. The results should never be taken as realistic predictions of how the system would actually respond to the imagined perturbation.)

The primary emphasis here will be upon creating a generic simulation package that will provide the user with some objective means for balancing a data set or for inferring the values of missing data (or for doing both simultaneously) For these purposes it is necessary to choose a highly stable dynamic scheme. Linear donor-controlled kinetics are especially relevant in that they yield models that are inherently stable. Even if the starting network is not balanced, the ensuing simulation will converge to a well-defined, stable steady state, i.e., the program brings the flows smoothly into balance without the user having to make arbitrary decisions to force a balance (like the commonly used tactic of adjusting the respiration). Donor-control kinetics also provide a reasonably acceptable model of "passive" processes occurring in ecosystems, such as respiration, sedimentation, losses incurred by advection, etc. With some discretion one can use this algorithm to estimate missing flows (cf. Vézina 1989, this volume and the example below).

MODEL DESCRIPTION

In the companion package of programs the reader can be provided with a simulation package called AUTOMOD that will accept the network data in exactly the input format used for the other analysis techniques described in Kay *et al.* 1989, this volume. The algorithm will invoke either of two sets of generic constitutive assumptions, prompt the user to describe any perturbations (if necessary) and automatically establish the run parameters.

If one desires only generality and stability, then linear, donor-controlled kinetics will suffice. Knowing the biomass, M_{i0}, present in compartment i under nominal conditions (the original network before any perturbations are specified) and the flow from i to j, F_{ij0}, under the same conditions, then the flow at any later time is modelled by

$$F_{ij} = Kd * M_i, \qquad (1)$$

where:

F_{ij} = the flow form prey i to predator j at later time t,

M_i = the biomass in prey i at time t, and

$Kd = F_{ij0}/M_{i0}$, a constant.

Thus, the donor-controlled constants can be readily calculated from the data as presented in the SCOR formatted files.

For those wishing to use the algorithm to accomplish something approaching realistic simulation, the donor-control assumption is usually a poor representation of actual predator-prey dynamics. It sometimes stretches one's belief to think that, as H.T. Odum once opined, "the rabbit forces itself into

the fox's jaws." The intensity of predation is often a crucial factor in determining how much passes from prey to predator. Thus, one might try to employ linear, predator-control dynamics in the form

$$F_{ij} = Kp \cdot M_j, \tag{2}$$

where M_j = the biomass of predator j at time t, and

$Kp = F_{ij0}/M_{j0}$, a constant.

Unfortunately, linear predator-control kinetics are inherently unstable. Without any information in (2) about the size of the prey stock in i, a growing predator population is destined to annihilate its prey. One could include information on prey stocks by interjecting their biomass as a factor in (2), resulting in the familiar Lotka-Volterra bilinear relationship. While bilinear kinetics are sometimes stable (Ulanowicz, 1972), they more often are not.

One reasonably successful way of stabilizing predator- control dynamics was suggested by Wiegert (1973), who moderated system behavior by interjecting thresholds into the kinetics. Below a certain threshold of low prey density, predation was assumed to cease, thereby providing the prey a "refuge" level below which it would become immune to capture. Wiegert also assumed that, above a second higher level of prey density, the predator ration reached a saturation value (as do the Michaelis-Menten and Ivlev expressions). Between the two threshold values the predator ration was assumed to rise in a linear fashion. With his two-parameter, piecewise linear expression Wiegert was able to simulate the essential features of predator control in a well-behaved model. The same stabilizing effect achieved by Wiegert can also be accomplished by modifying (2) to include a single-parameter smooth function,

$$F_{ij} = Kp \cdot M_j \cdot e^{(1-X_i)}, \tag{3}$$

where $X_i = M_{i0}/M_i$. The reader will notice that (3) reduces to (2) at the nominal conditions (where all $X_i = 1$.) As prey items become scarce, the argument of the exponent in (3) becomes a large negative number. Thus, the predation by j diminishes in exponential fashion as prey items begin to vanish. For example, by the time the prey biomass has fallen to 0.1 of its nominal level, the predation rate has decreased to $1.23 \cdot 10^{-4}$ of its nominal value. On the other hand, should prey become very abundant, X_i will become insignificant, and the predator's ration will saturate at about 2.72 times its nominal value.

Implementing the modified predator controlled kinetics in algorithmic fashion is straightforward. At the outset, however, one needs to specify whether each compartment is living (i.e., feeding) or dead

(passive). If the recipient of a flow is living, the transfer will be modeled by (3), where KP and X_i will be determined using the nominal values F_{ij0}, M_{j0} and M_{i0}. If the recipient is not living, then the kinetics will be assumed to be (1), and Kd will be calculated using F_{ij0} and M_{i0}. In addition, respirations will be assumed to follow (1). The distinction between living and non-living compartments is achieved in the SCOR format by placing all the non-living elements last in the species list and specifying the total number of living components.

AUTOMOD will model a network using either the linear donor controlled or the modified predator controlled scheme and was written in FORTRAN77 for use on the IBM PC or compatible computers. AUTOMOD first reads the nominal conditions given in the standard format used in this book and immediately sets up one of the kinetic schemes described above. It then queries the user for details on how he/she wishes to perturb the nominal conditions. The response to the perturbations is integrated forward in time using a standard Runge-Kutta fourth order polynomial scheme (Press *et al.* 1986).

For those using AUTOMOD simply to bring their flow data into balance, instructions will appear on the screen as to how to specify the run parameters in order to accomplish this task.

The user can perturb the nominal conditions in several ways. Two of those ways involve changing a nominal biomass or exogenous input level. The response of the predator-controlled dynamics to these changes is usually stable whenever the nominal flows are in balance. One also has the option of changing coefficient values within the model. With the predator controlled dynamics these latter changes often result in the extinction of one or more compartments. (A special extinction subroutine is included to excise any compartment that is about to go extinct before it has the chance to shut down the integration scheme by violating DOS error traps.)

EXERCISING THE MODEL

Three examples serve to demonstrate the use and behavior of the model. The first is exceedingly simple and consists of the hypothetical example portrayed in Figure 4.1a. A producer of 100 units of biomass per unit time has a standing stock of 50 units. It sustains two heterotrophs, the top one feeding at a rate of one unit of producer per unit of predator per unit time and the bottom feeding at triple that rate. If one doubles the primary production and assumes linear, donor control, all the values shown in Figure 4.1a will eventually double in a monotonic, negative exponentially damped fashion.

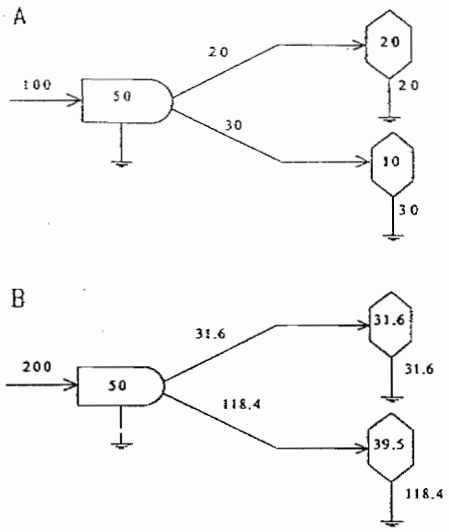

Figure 4.1. (a) Hypothetical flows among a primary producer and two heterotrophs. Units are arbitrary. (b) The result of doubling the primary production when heterotrophs feed according to equation (3).

The response of the modified donor control model (Figure 4.1b) is more interesting. The approach to steady-state involves exponentially damped oscillations. The producer biomass initially increases to about 79.9 units, falls to 48.1 and finally levels out at its nominal value. Fifty percent more production reaches the heterotrophs, but the greater share goes to the more voracious bottom heterotroph. The top heterotroph falls well short of doubling its biomass, as it did in the donor controlled scenario; however, the bottom predator more than compensates by almost quadrupling its biomass. If the two herbivorous transfers were the initial links of two separate loops back to the producer, it becomes obvious that the bottom pathway would be on its way towards displacing the upper one. One perceives a rudimentary mechanism behind the phenomenological observation that enriched systems tend to cycle more, but along more dissipative, trophically lower cyclic pathways (Ulanowicz, 1984).

The second example demonstrates how one might achieve a balanced network starting with data that does not quite add up. In Figure 4.2a are displayed the approximate data for the Cone Spring network shown earlier in Figure 2.1b in Kay *et al.* (1989, this volume). Several flows are depicted as missing, namely all the respirations and the energy transfer from detritus feeders to carnivores. The rates at which these processes occur are known, but not the absolute values of the flows. The approximate values for the respiration coefficients are 7.0, 28.0, 30.0, 12.0 and 0.9 y^{-1} for compartments 1 thru 5, respectively. The detritus feeders were observed to fall prey to the carnivores at the rate of 6.2 y^{-1}.

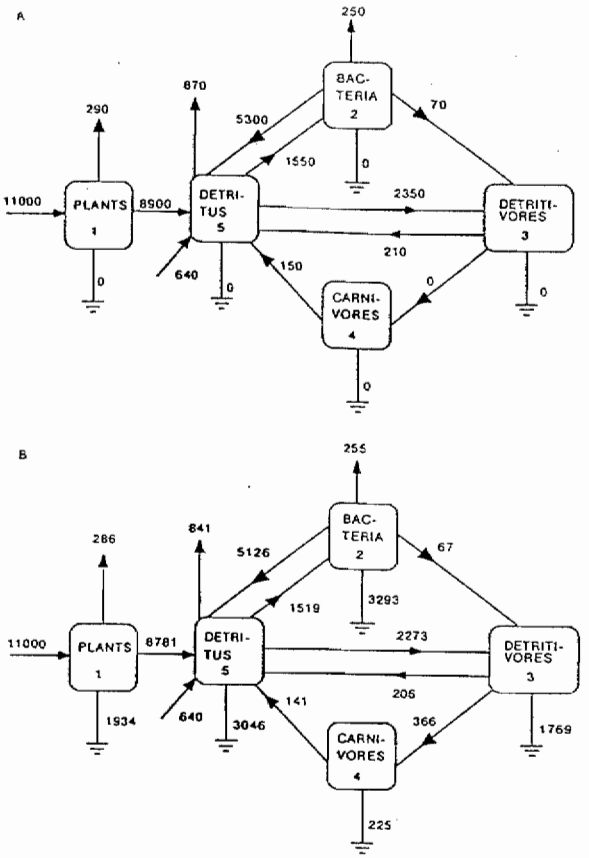

Figure 4.2. (a) Approximate energy flows (kcal $m^{-2}y^{-1}$) through the Cone Spring ecosystem (cf. Figure 2.1b in Kay *et al.* 1989, this volume). Data on respirations and carnivory are available only as rate coefficients. (b) A balanced network produced from 4.2a using the donor-controlled option of AUTOMOD

A balanced estimate of the Cone Spring network is constructed from the approximate data using AUTOMOD as follows: The energy stocks and available flow data are put into a standard input file to be read by AUTOMOD. The program is then run with this data, and the user chooses the linear, donor controlled form for execution. The run parameters are specified so as to allow ample time for the system to come to steady state (about 5 years in this case.) The rate data for the missing flows are entered as if they were perturbations of the rate constants. For example, the respiration coefficient for the plants (compartment 1) is "perturbed" from the default value of 0.0 to the measured value of 7.0 y^{-1}.

The resulting balanced network is shown in figure 4.2b. The correspondence of the balanced flows to the actual data in Figure 2.1b in Kay *et al.*(1989, this volume) is seen to be commensurate with the approximations made in arriving at figure 4.2a.

The third and final example shows how one can simulate the changes in the system's configuration that might initially occur after a perturbation to the system. In this instance the disturbance is a tripling of the energy content of the carnivore compartment in the Cone Spring system. Figure 4.3 displays the responses of the bacteria, detritus feeder and carnivore stocks to this perturbation. As one might expect, the carnivore population is initially well above its carrying capacity and begins to fall precipitously. At first the detritus feeders are being heavily grazed and they, too, rapidly decline. The bacteria, thanks to a relief from grazing pressure and an influx of detrital energy from 3 and 4 start out to rise in numbers. The carnivore biomass eventually undershoots its carrying capacity and starts to recover from its crash. Thereupon follow damped oscillations in all three compartments that eventually converge upon the nominal stock levels.

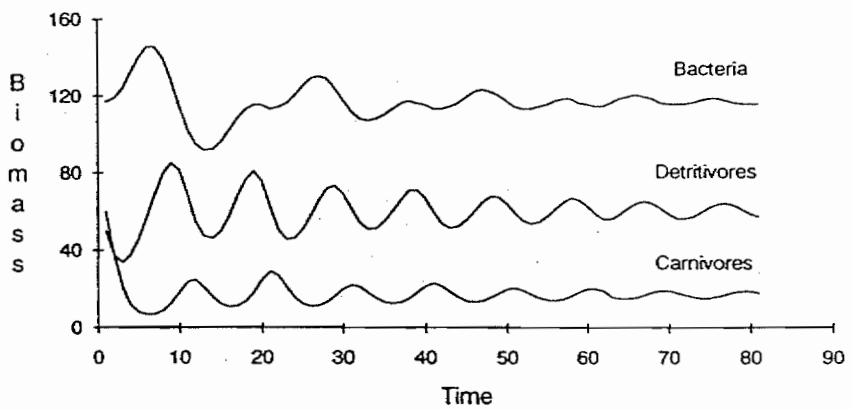

Figure 4.3. Simulated changes in the energy stocks (kcal m^{-2}) of the bacteria, detritus feeders and carnivores resulting from an arbitrary tripling in the stock of carnivores.

DISCUSSION

Despite the extreme simplicity of the linear-donor controlled assumption, models built upon this dynamic scheme are seen to serve as useful aids in helping investigators to estimate the balance of flows in their systems of interest. The available flow data almost never balance around each compartment. However, making arbitrary decisions to force a balance has the effect of changing at least some of the rates away from their values as observed in nature. Using the donor-controlled option in AUTOMOD allows one to retain the correct rates as the flows are brought into balance.

AUTOMOD also allows the user to simulate what might happen in a given network if certain perturbations were forced upon the resident populations. Because there is no easy way to program generic changes in exogenous variables, such as sunlight, temperature, pH, etc., the outputs of these predator-controlled simulations must always be viewed with extreme caution. At best such results represent an extended "back-of-the-envelope" type calculation to conjecture what the initial responses of predator- prey interactions to temporary imbalances might be.

Despite these limitations, AUTOMOD promises to be a useful addition to the arsenal of tools for analyzing networks of marine ecosystem flows.

ACKNOWLEDGMENTS

The author is grateful to Drs. Lee Graham and Richard Wiegert for testing early versions of AUTOMOD and for their suggested changes in the code. The editors of this volume also offered useful suggestions for revision of an earlier draft. The development of the algorithm was supported under a contract with the Department of the Navy (NOOO24-86-C-5188).

REFERENCES

Ducklow, H., M.J.R. Fasham & A.F. Vezina 1989. Derivation and analysis of flow networks for open ocean plankton systems. In: Wulff, F., J.G. Field & K.H. Mann (eds), *Network Analysis in Marine Ecology: Methods and Applications.* Lecture notes on coastal and estuarine studies. Springer-Verlag, New York.

Kay, J.J., L. Graham & R.E. Ulanowicz 1989. A detailed guide to network analysis. In: Wulff, F., J.G. Field & K.H. Mann (eds), *Network Analysis in Marine Ecology: Methods and Applications.* Lecture notes on coastal and estuarine studies. Springer-Verlag, New York.

Press, W.H., B.P. Flannery, S.A. Teukolsky & W.T. Vetterling 1986. *Numerical Recipes: The Art of Scientific Computing.* Cambridge University Press, Cambridge, Mass. 818p.

Ulanowicz, R.E. 1972. Mass and energy flow in closed ecosystems. J. Theor. Biol. 34:239-253.

Ulanowicz, R.E. 1984. Community measures of marine food networks and their possible applications. pp. 23-47 in: Fasham, M.J. R. (ed.) *Flows of Energy and Materials in Marine Ecosystems.* Plenum Publishing Corp., New York.

Vézina, A.F. 1989. Construction of flow networks using inverse methods. In: Wulff, F., J.G. Field & K.H. Mann (eds), *Network Analysis in Marine Ecology: Methods and Applications.* Lecture notes on coastal and estuarine studies. Springer-Verlag, New York.

Wiegert, R.G. 1973. A general ecological model and its use in simulating algal-fly energetics in a thermal spring community. pp. 85-102 in: Geir, P.W., L.R. Clark, D.J. Anderson, and H.A. Nix (eds) *Insects: Studies in Population Management,* Vol. 1. Ecol. Soc. Australia, Canberra.

To obtain a diskette containing the software for the techniques used in this book, (for IBM or compatible computers on a MS DOS 360 kB diskette, for a Macintosh computer on a 3.5" diskette) send a money order or bank draft for US $ 10.00 payable to SCOR to:

Excecutive Secretary, SCOR
Department of Oceanography
Dalhousie University
Halifax, N. S. CANADA
B3H 4JI,

requesting Network Analysis Software.