ELSEVIER

Ecological Modelling 86 (1996) 1–36

ECOLOGICAL MODELLING

Energy flow through the Lake Ontario food web: conceptual model and an attempt at mass balance

Efraim Halfon [a,*], Natalie Schito [a], Robert E. Ulanowicz [b]

[a] *National Water Research Institute, Canada Centre for Inland Waters, Burlington, Ont., CanadaL7R 4A6*
[b] *Chesapeake Bay Biological Station, University of Maryland, Solomons, MD 20688, USA*

Received 30 March 1993; accepted 30 November 1994

Abstract

The trophic status of Lake Ontario is studied in energy terms, and the information summarized as a food web. Both published data and personal communications are used; critical data deficiencies are pointed out. The underlining assumptions of the model are described along with the research needed to fully test these assumptions. The food web is not balanced in energy terms. Not enough information exists in the literature to balance the energy entering the lake with energy present and transferring through the different levels of the food web. A mathematical model is used to logically integrate the data and to produce a balanced food web. The mathematical model Network developed by Ulanowicz is used for this purpose. This procedure provides generality and stability to the hypothesized energy flow through the Lake Ontario food web even if the final result might not coincide completely with reality. The results show that the food web of Lake Ontario is organized in five food chain levels and that recycling plays an important role. The analysis of the food web in energy terms is important because it allows the computation of the fish biomass that can be sustained by primary production. However, confident prediction of the fish biomass can not be performed at present given the lack of data on some important energy transfer pathways in the food chain.

Keywords: Energy flow; Food webs; Lake ecosystems

1. Introduction

The purpose of this work is to conceptualize and quantify the food web structure in Lake Ontario and to find major lack of understanding. This food web is uncertain and can not be crystallized since Lake Ontario is in a state of flux due to the decrease in phosphorus loadings since the early 1970s. This food web is cumulative (Schoenly and Cohen, 1991) in the sense that the information used was gathered over many occasions, covering about 20 years. Lake Ontario has long been the object of scientific studies, however, as far as we have been able to ascertain, no food web in energy terms has ever been published. Flint (1986) published a food web of Lake Ontario in terms of carbon flow, however his representation and ours differ significantly in a number of points. Our version is in energy terms [Joules], it contains a detrital compartment, essential for the quantifi-

* Corresponding author.

SSDI 0304-3800(94)00195-2

Fig. 1. Outline of Lake Ontario.

cation of recycling energy within the ecosystem. We also replace his top predator compartment with the five most important species. This attempt to look at Lake Ontario from a system perspective is precursory, much data from phytoplankton to fish are missing or are contained in data bases not available to the scientific community at large. The information used was collected mainly from published literature, although some have been provided through personal communication. In many instances we have had to make assumptions; these are explicitly stated in the results section. Lake Ontario (Fig. 1), one of the five Great Lakes of North America, is 300 km long, 70 km wide with a mean depth of 86 m. The lake is located in between Canada and the United States. The main tributary is the Niagara River with a flow of approximately 6000 m^3 per second.

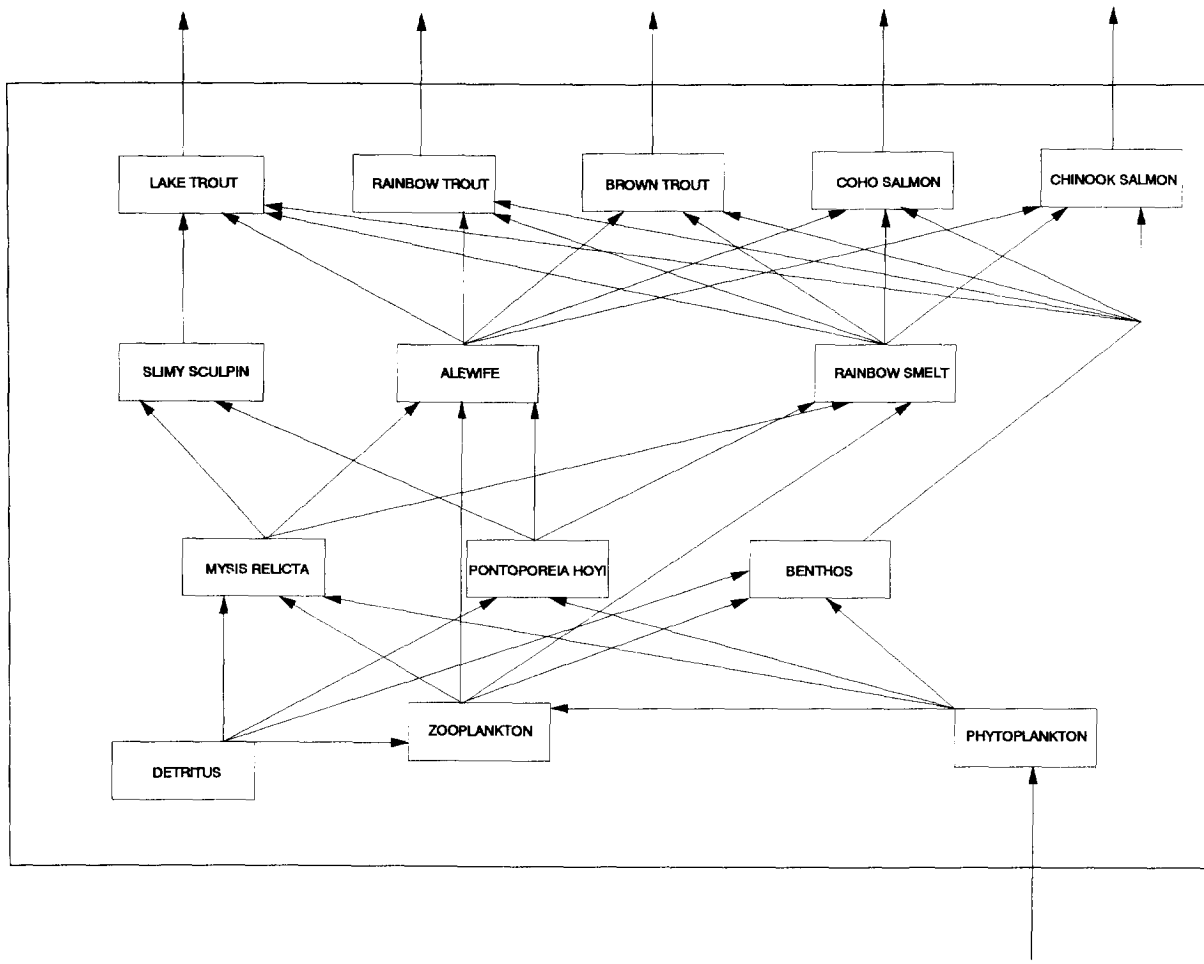

Fig. 2. Schematic food web of Lake Ontario.

This river connects Lake Erie to Lake Ontario. The main emissary is the St. Lawrence River which connects Lake Ontario to the Atlantic Ocean.

We acknowledge the fact that the systematic name of *Pontoporeia hoyi* has recently been changed to *Diporeia* sp. (Bousfield, 1989). However for the balance of this report we refer to it as *Pontoporeia hoyi*.

2. Methods

We collected data published since 1970 on the Lake Ontario ecosystem. These data were then elaborated and analyzed to construct a food web. Data from other ecosystems and from laboratory experiments have been used when no other data were available.

When we became aware that the food web constructed with the data collected from the literature and personal communication would not be balanced in terms of energy, we sought out a method to integrate the data in a logical manner and yield a balanced data set. Ulanowicz (1989) has developed a computer program, AUTOMOD, which integrates all available information and produces a simulation, thus providing an objective means for balancing the data set. We employed this program to supply generality and stability to the hypothesized energy flow through the Lake Ontario food web.

2.1. Choice of food web compartments

Table 1 shows a list of all compartments. Fig. 2 shows an abstract representation of the Lake Ontario food web; it conceptualizes the energy links in the lake ecosystem. This food web includes detritus as a compartment for two reasons; one is that detritus is an important energy source for zooplankton and benthos, and two is that we are ultimately interested in the cycling of toxic materials within the Lake Ontario ecosystem, and we think that it is important to emphasize cycling of energy. Cohen (1991) seems to disagree with the inclusion of detritus in the first level of a food chain. However, since this point is still open for discussion in the literature (Patten et al., 1990) we have decided to include detritus so that this information can eventually be used (Halfon and Schito, in preparation) in a cycling analysis using network theory (Baird and Ulanowicz, 1989).

Table 1
Food web compartments in Lake Ontario

Compartment name	Scientific name
detritus	
phytoplankton	
zooplankton	
benthos	
Mysis relicta	*Mysis relicta*
Pontoporeia hoyi	*Diporeia* sp.
slimy sculpin	*Cottus cognatus*
rainbow smelt	*Osmerus mordax*
alewife	*Alosa pseudoharengus*
lake trout	*Salvelinus namaycush*
chinook salmon	*Oncorhynchus tshawytscha*
coho salmon	*Oncorhynchus kisutch*
brown trout	*Salmo trutta*
rainbow trout	*Oncorhynchus mykiss*

The living organisms compartments were chosen to be closer to the species level rather than to a functional level. We grouped the major organism types, for example phytoplankton, into individual compartments. Ideally, we would have liked to further subdivide some of these compartments (such as the benthos compartment into tubificids and chironomids and the zooplankton compartment into cladocerans, copepods, and omnivorous zooplankton), however, the lack of data prevented us from doing this for all organisms. Two species were left out completely because of the lack of an energy budget, the lamprey and the zebra mussel. Both species are important and belong to the food web, but they had to be left out until clearer understandings of their roles in the Lake Ontario ecosystem are obtained. The trophic links were established with information concerning the diet habits of the major compartments (usually from stomach contents).

2.2. Computation of the energy balance

Organisms need energy to sustain themselves. No direct measurements of the biomass ex-

Table 2
Conversion values used to build the food web from published data

Compartment	Assumptions	Reference
Detritus	4421 kcal · g^{-1} dry weight	Cummins and Wuycheck, 1971
Phytoplankton	3482 kcal · g^{-1} dry weight	Cummins and Wuycheck, 1971
	dry weight = 0.1 · wet weight	
Zooplankton	1987 J · g^{-1} wet weight	calc. from Stewart and Binkowski, 1986
	dry weight = 0.1 · wet weight	
	1 g O_2 respired = 14 150 J	approx. from Elliott and Davison, 1975 and Brinkhurst and Austin, 1979
Other benthos	3558 J · g^{-1} wet weight	calc. from Gardner et al., 1985
	dry weight = 0.15 · wet weight	Strayer and Likens, 1986
	1 g O_2 respired = 14 150 J	approx. from Elliott and Davison, 1975 and Brinkhurst and Austin, 1979
Mysis relicta	4604 J · g^{-1} wet weight	Stewart et al., 1983
	dry weight = 0.21 · wet weight	Evans and Landrum, 1989
	preferred temp. = 4°C	J. Elrod, pers. commun.
	average weight = 2.6 mg dry	Borgmann, 1985
	1 g O_2 respired = 14 150 J	approx. from Elliott and Davison, 1975 and Brinkhurst and Austin, 1979
Pontoporeia hoyi	4185 J · g^{-1} wet weight	Stewart et al., 1983
	dry weight = 0.27 · wet weight	Evans and Landrum, 1989
	preferred temp. = 5°C	J. Elrod, pers. commun.
	average weight = 1.34 mg dry	Borgmann and Whittle, 1983
	1 g O_2 respired = 14 150 J	approx. from Elliott and Davison, 1975 and Brinkhurst and Austin, 1979
Slimy sculpin	5743 J · g^{-1} wet weight	Rottiers and Tucker, 1982
	dry weight = 0.25 · wet weight	
	preferred temp. = 5°C	Coutant, 1977
	average weight = 10 g wet	none
	1 g O_2 respired = 13 560 J	Elliott and Davison, 1975
Rainbow smelt	6656 J · g^{-1} wet weight	Rottiers and Tucker, 1982
	dry weight = 0.25 · wet weight	
	preferred temp. = 11.1°C	Olson et al., 1988
	average weight = 5 g dry	Borgmann, 1985
	1 g O_2 respired = 13 560 J	Elliott and Davison, 1975
Alewife	6000 J · g^{-1} wet weight	calc. from Stewart and Binkowski, 1986, J. Elrod, pers. commun., Rottiers and Tucker, 1982
	dry weight = 0.25 · wet weight	
	preferred temp. = 17.4°C	Olson et al., 1988
	average weight = 20 g wet	none
	1 g O_2 respired = 13 560 J	Elliott and Davison, 1975
All salmonids	10% of population weight is juvenile	none
	10% of population removed by fishing	Flint, 1986
	2.91×10^8 g C · yr^{-1} of salmonines stocked	Flint, 1986
	total biomass = 0.1 · (alewife + sculpin + smelt biomass)	none
	1 g O_2 respired = 13 560 J	Elliott and Davison, 1975
Lake trout	average weight = 500 g dry	Borgmann, 1985
	preferred temp. = 10.1°C	Olson et al., 1988
	10 646 J · g^{-1} wet weight for adults	calc. from Stewart et al., 1983
	juvenile average weight = 260 g wet	Stewart et al., 1983
	6501 J · g^{-1} wet weight for juveniles	calc. from Stewart et al., 1983
	31% of total salmonid biomass	based on Savoie and LeTendre, 1991
	31% (by weight) of total stocked	based on Savoie and LeTendre, 1991

Table 2 (continued)

Compartment	Assumptions	Reference
Chinook salmon	average weight = 250 g dry	none
	preferred temp. = 14.4°C	Olson et al., 1988
	6749 $J \cdot g^{-1}$ wet weight for adults	calc. from Stewart and Ibarra, 1991
	juvenile average weight = 160 g wet	calc. from Niimi, 1981
	5921 $J \cdot g^{-1}$ wet weight for juveniles	calc. from Stewart and Ibarra, 1991
	36% of total salmonid biomass	based on Savoie and LeTendre, 1991
	36% (by weight) of total stocked	based on Savoie and LeTendre, 1991
Coho salmon	average weight = 250 g dry	Borgmann, 1985
	preferred temp. = 14°C	adjusted using Coutant, 1977
	6749 $J \cdot g^{-1}$ wet weight for adults	calc. from Stewart and Ibarra, 1991
	juvenile average weight = 160 g wet	calc. from Niimi, 1981
	5921 $J \cdot g^{-1}$ wet weight for juveniles	calc. from Stewart and Ibarra, 1991
	10% of total salmonid biomass	based on Savoie and LeTendre, 1991
	10% (by weight) of total stocked	based on Savoie and LeTendre, 1991
Brown trout	average weight = 2000 g wet	none
	preferred temp. = 13.4°C	Olson et al., 1988
	6500 $J \cdot g^{-1}$ wet weight	calc. using P/B
	juvenile average weight = 260 g wet	none
	13% of total salmonid biomass	based on Savoie and LeTendre, 1991
	13% (by weight) of total salmonines	based on Savoie and LeTendre, 1991
Rainbow trout	average weight = 250 g dry	none
	preferred temp. = 13.8°C	adjusted using Coutant, 1977
	8780 $J \cdot g^{-1}$ wet weight for adults	calc. using Stewart et al., 1983
	juvenile average weight = 160 g wet	none
	6193 $J \cdot g^{-1}$ wet weight for juveniles	calc. using Stewart et al., 1983
	10% of total salmonid biomass	based on Savoie and LeTendre, 1991
	10% (by weight) of total stocked	based on Savoie and LeTendre, 1991

pressed in energy terms or of energy fluxes among compartments exists for Lake Ontario in published form, thus they were obtained by indirect means. The main assumption is that the energy flux through the living compartments could be calculated with the equation:

$$\text{Consumption} = \text{respiration} + \text{SDA} + \text{production} + \text{egestion} + \text{excretion} \quad (1)$$

where all terms are expressed as rates [$J \cdot d^{-1}$]. In most cases the consumption rate was calculated from terms on the right hand side of Eq. 1. An exception was made for rainbow smelt and brown trout. For rainbow smelt we calculated the respiration rate from the other parameters in Eq. 1, and for brown trout we calculated the production rate from the other terms.

The energy utilized through respiration and SDA (energy used in the digestion of food) is assumed lost from the ecosystem to the surrounding environment. This energy was no longer available to the organisms in Lake Ontario. We also assumed that the final sink for energy lost through egestion and excretion was the detrital compartment.

2.3. Other data, models, and assumptions

In all calculations we used a volume of 1.68×10^{12} m^3 and an area of 1.95×10^{10} m^2 for Lake Ontario. All data for living organisms are expressed in fresh weight; when dry weights were reported in the literature they were converted. The conversion terms are shown where necessary in the text, and are also summarized in Table 2. When data were reported on a per hour basis or per year basis they were converted to per day.

In many instances data were not available on metabolic processes of fish. In these cases we

employed bioenergetic models: as reported by Stewart and Binkowski (1986) for alewife, by Hewett and Johnson (1987) for chinook and coho salmon, by Elliott (1976) for brown trout, or by Stewart et al. (1983) for lake trout. To estimate the energetics of slimy sculpin we employed the bioenergetic model for northern pike (Hewett and Johnson, 1987). We evaluated the bioenergetics of rainbow trout using the lake trout model (Stewart et al., 1983). The energy content of fish from wet weight was computed using published data. Table 3 summarizes all available data.

3. Results

Fig. 3 shows the Lake Ontario food web constructed using data from the literature and personal communications. The following explains in detail all assumptions, data origin, and rationale for data used in the compilation of the food web.

Table 3
Data in original form or computed through published models

	Reported value	Reference	Converted value [a]
Detritus			
Mass	1 mg dry $\cdot$ l^{-1}		3.11×10^{16} J
Import (all sources)	9.14×10^6 t $\cdot$ yr^{-1}	Kemp and Harper, 1976	4.63×10^{14} J $\cdot$ d^{-1}
Export	3.44×10^6 t $\cdot$ yr^{-1}	Kemp and Harper, 1976	1.74×10^{14} J $\cdot$ d^{-1}
Phytoplankton			
Biomass	0.35 g fresh $\cdot$ m^{-3}	Munawar et al., 1987	8.57×10^{14} J
Production	P/B = 365 $\cdot$ yr^{-1}	Borgmann and Whittle, 1983	8.57×10^{14} J $\cdot$ d^{-1}
Sedimentation	1 m $\cdot$ d^{-1}		9.95×10^{12} J $\cdot$ d^{-1}
Zooplankton			
Biomass	23.41 mg dry $\cdot$ m^{-3}	Makarewicz and Jones, 1990	7.81×10^{14} J
Production	13.99 g dry $\cdot$ m^{-2} $\cdot$ yr^{-1} (calc.)	Johannsson and O'Gorman, 1991	1.49×10^{13} J $\cdot$ d^{-1}
Respiration	0.01 g O_2 $\cdot$ g^{-1} $\cdot$ d^{-1}	Park et al., 1974, Scavia et al., 1974	5.56×10^{13} J $\cdot$ d^{-1}
SDA	none	none	none
Excretion	3% of consumption	Park et al., 1974, Scavia et al., 1974	6.60×10^{12} J $\cdot$ d^{-1}
Egestion	65% of consumption	Park et al., 1974, Scavia et al., 1974	1.43×10^{14} J $\cdot$ d^{-1}
Sedimentation	1 m $\cdot$ d^{-1}		9.07×10^{12} J $\cdot$ d^{-1}
Consumption	computed	this reference	2.20×10^{14} J $\cdot$ d^{-1}
Benthos			
Biomass	206.1 mg dry $\cdot$ m^{-2} (calc.)	Johannsson et al., 1985	9.53×10^{13} J
Production	0.012 kcal $\cdot$ m^{-2} $\cdot$ d^{-1}	Stadelmann et al., 1974	9.80×10^{11} J $\cdot$ d^{-1}
Respiration	0.14 μl O_2 $\cdot$ dry mg^{-1} $\cdot$ h^{-1}	Brinkhurst et al., 1972	2.68×10^{11} J $\cdot$ d^{-1}
SDA	none	none	none
Excretion + Egestion	50% of consumption	Welch, 1968	1.25×10^{12} J $\cdot$ d^{-1}
Consumption	computed	this reference	2.50×10^{12} J $\cdot$ d^{-1}
Mysis relicta			
Biomass	0.53 g dry $\cdot$ m^{-2} (calc.)	Shea and Makarewicz, 1989	2.27×10^{14} J
Production	1.64 g dry $\cdot$ m^{-2} $\cdot$ yr^{-1}	Shea and Makarewicz, 1989	1.92×10^{12} J $\cdot$ d^{-1}
Respiration	equation; see reference	Lasenby and Langford, 1972	4.98×10^{12} J $\cdot$ d^{-1}
SDA		included in respiration	
Excretion	3% of consumption	Park et al., 1974, Scavia et al., 1974	7.68×10^{11} J $\cdot$ d^{-1}
Egestion	70% of consumption	Thomann and Connolly, 1984	1.79×10^{13} J $\cdot$ d^{-1}
Consumption	computed	this reference	2.56×10^{13} J $\cdot$ d^{-1}
Pontoporeia hoyi			
Biomass	14.96×10^3 t dry below 10 m	Johannsson et al., 1985	2.32×10^{14} J
Production	30.99×10^3 t dry $\cdot$ yr^{-1}	Johannsson et al., 1985	1.32×10^{12} J $\cdot$ d^{-1}
Respiration	equation; see reference	Johannsson et al., 1985	4.30×10^{12} J $\cdot$ d^{-1}
SDA	included in respiration		
Excretion + Egestion	50% of consumption	Welch, 1968	5.62×10^{12} J $\cdot$ d^{-1}
Consumption	computed	this reference	1.12×10^{13} J $\cdot$ d^{-1}

Table 3 (continued)

	Reported value	Reference	Converted value [a]
Slimy sculpin		modelled after northern pike	
Biomass	2502 t in U.S. water	Gray, 1979	2.87×10^{13} J
Production	$P/B = 1 \cdot yr^{-1}$	Borgmann, 1985, Flint, 1986	7.86×10^{10} J · d^{-1}
Respiration	equation; see reference	Hewett and Johnson, 1987	1.64×10^{11} J · d^{-1}
SDA	11.2% of consumption [b]	Hewett and Johnson, 1987	4.18×10^{10} J · d^{-1}
Excretion	5.7% of consumption [b]	Hewett and Johnson, 1987	2.13×10^{10} J · d^{-1}
Egestion	18.1% of consumption	Warren and Davis, 1967	6.75×10^{10} J · d^{-1}
Consumption	computed	this reference	3.73×10^{11} J · d^{-1}
Rainbow smelt		modelled after northern pike	
Biomass	1.20×10^{9} g	calc. from O'Gorman et al., 1987 and Gray, 1979	9.45×10^{13} J
Production	$P/B = 1 \cdot yr^{-1}$	Borgmann, 1985, Flint, 1986	2.59×10^{11} J · d^{-1}
Respiration	equation; see reference [b]	Hewett and Johnson, 1987	5.75×10^{11} J · d^{-1}
SDA	11.2% of consumption	Hewett and Johnson, 1987	1.48×10^{11} J · d^{-1}
Excretion	5.6% of consumption	Hewett and Johnson, 1987	7.39×10^{10} J · d^{-1}
Egestion	20% of consumption	Hewett and Johnson, 1987	2.64×10^{11} J · d^{-1}
Consumption	computed	this reference	1.32×10^{12} J · d^{-1}
Alewife			
Biomass	887 700 t in U.S. waters	calc. from O'Gorman et al., 1987	1.05×10^{15} J
Production	$P/B = 1 \cdot yr^{-1}$	Borgmann, 1985, Flint, 1986	2.87×10^{12} J · d^{-1}
Respiration	equation; see reference	Stewart and Binkowski, 1986	8.99×10^{13} J · d^{-1}
SDA	14.7% of consumption	Stewart and Binkowski, 1986	2.23×10^{13} J · d^{-1}
Excretion	8.4% of consumption	Stewart and Binkowski, 1986	1.28×10^{13} J · d^{-1}
Egestion	16% of consumption	Stewart and Binkowski, 1986	2.43×10^{13} J · d^{-1}
Consumption	computed	this reference	1.52×10^{14} J · d^{-1}
Lake trout			
Biomass			
adult	5.41×10^{9} g	based on Savoie and LeTendre, 1991	5.76×10^{13} J
juvenile	6.01×10^{8} g	none	3.91×10^{12} J
Production			
adult	$P/B = 0.2 \cdot yr^{-1}$	Borgmann, 1985	3.16×10^{10} J · d^{-1}
juvenile	$P/B = 0.2 \cdot yr^{-1}$	Borgmann, 1985	2.14×10^{09} J · d^{-1}
Respiration			
adult	equation; see reference	Stewart et al., 1983	6.77×10^{10} J · d^{-1}
juvenile	equation; see reference	Stewart et al., 1983	1.38×10^{10} J · d^{-1}
SDA			
adult	13.1% of consumption [b]	Stewart et al., 1983	2.31×10^{10} J · d^{-1}
juvenile	13.6% of consumption [b]	Stewart et al., 1983	3.71×10^{09} J · d^{-1}
Excretion			
adult	6.8% of consumption [b]	Stewart et al., 1983	1.20×10^{10} J · d^{-1}
juvenile	7.0% of consumption [b]	Stewart et al., 1983	1.91×10^{09} J · d^{-1}
Egestion			
adult	23.8% of consumption [b]	Stewart et al., 1983	4.19×10^{10} J · d^{-1}
juvenile	21.0% of consumption [b]	Stewart et al., 1983	5.73×10^{09} J · d^{-1}
Consumption			
adult	computed	this reference	1.76×10^{11} J · d^{-1}
juvenile	computed	this reference	2.73×10^{10} J · d^{-1}
Import	31% of total salmonid import	calc. using Flint, 1986 and Savoie and LeTendre, 1991	2.68×10^{10} J · d^{-1}
Export	10% of production	Flint, 1986	3.37×10^{09} J · d^{-1}

Table 3 (continued)

	Reported value	Reference	Converted value [a]
Chinook salmon			
Biomass			
adult	6.28×10^9 g	based Savoie and LeTendre, 1991	4.24×10^{13} J
juvenile	6.98×10^8 g	none	4.13×10^{12} J
Production	modelled after coho salmon		
adult	$P/B = 3.0 \cdot yr^{-1}$	none	3.49×10^{11} J · d^{-1}
juvenile	$P/B = 3.0 \cdot yr^{-1}$	none	3.40×10^{10} J · d^{-1}
Respiration			
adult	equation; see reference	Hewett and Johnson, 1987	1.42×10^{11} J · d^{-1}
juvenile	equation; see reference	Hewett and Johnson, 1987	2.45×10^{10} J · d^{-1}
SDA			
adult	13.4% of consumption [b]	Hewett and Johnson, 1987	1.17×10^{11} J · d^{-1}
juvenile	13.9% of consumption [b]	Hewett and Johnson, 1987	1.40×10^{10} J · d^{-1}
Excretion			
adult	8.5% of consumption [b]	Hewett and Johnson, 1987	7.44×10^{10} J · d^{-1}
juvenile	8.8% of consumption [b]	Hewett and Johnson, 1987	8.89×10^{09} J · d^{-1}
Egestion			
adult	22.0% of consumption [b]	Hewett and Johnson, 1987	1.93×10^{11} J · d^{-1}
juvenile	19.1% of consumption [b]	Hewett and Johnson, 1987	1.92×10^{10} J · d^{-1}
Consumption			
adult	computed	this reference	8.75×10^{11} J · d^{-1}
juvenile	computed	this reference	1.01×10^{11} J · d^{-1}
Import	36% of total salmonid import	calc. using Flint, 1986 and Savoie and LeTendre, 1991	2.84×10^{10} J · d^{-1}
Export	10% of production	Flint, 1986	3.83×10^{10} J · d^{-1}
Coho salmon			
Biomass			
adult	1.75×10^9 g	based Savoie and LeTendre, 1991	1.18×10^{13} J
juvenile	1.94×10^8 g	none	1.15×10^{12} J
Production			
adult	$P/B = 3.0 \cdot yr^{-1}$	Borgmann, 1985	9.70×10^{10} J · d^{-1}
juvenile	$P/B = 3.0 \cdot yr^{-1}$	Borgmann, 1985	9.45×10^{09} J · d^{-1}
Respiration			
adult	equation; see reference	Hewett and Johnson, 1987	3.85×10^{10} J · d^{-1}
juvenile	equation; see reference	Hewett and Johnson, 1987	6.27×10^{09} J · d^{-1}
SDA			
adult	13.4% of consumption [b]	Hewett and Johnson, 1987	3.24×10^{10} J · d^{-1}
juvenile	13.9% of consumption [b]	Hewett and Johnson, 1987	3.77×10^{09} J · d^{-1}
Excretion			
adult	8.4% of consumption [b]	Hewett and Johnson, 1987	2.03×10^{10} J · d^{-1}
juvenile	8.8% of consumption [b]	Hewett and Johnson, 1987	2.39×10^{09} J · d^{-1}
Egestion			
adult	22.2% of consumption [b]	Hewett and Johnson, 1987	5.37×10^{10} J · d^{-1}
juvenile	19.3% of consumption [b]	Hewett and Johnson, 1987	5.23×10^{09} J · d^{-1}
Consumption			
adult	computed	this reference	2.42×10^{11} J · d^{-1}
juvenile	computed	this reference	2.71×10^{10} J · d^{-1}
Import	10% of total salmonid import	calc. using Flint, 1986 and Savoie and LeTendre, 1991	7.88×10^{09} J · d^{-1}
Export	10% of production	Flint, 1986	1.07×10^{10} J · d^{-1}

Table 3 (continued)

	Reported value	Reference	Converted value [a]
Brown trout			
Biomass			
adult	2.27×10^9 g	based on Savoie and LeTendre, 1991	1.48×10^{13} J
juvenile	2.52×10^8 g	none	1.64×10^{12} J
Production			
adult	computed	this reference	6.02×10^{10} J · d^{-1}
juvenile	computed	this reference	1.09×10^{10} J · d^{-1}
Respiration			
adult	equation; see reference	Elliott, 1976	9.90×10^{10} J · d^{-1}
juvenile	equation; see reference	Elliott, 1976	1.76×10^{10} J · d^{-1}
SDA			
adult	included in respiration		
juvenile	included in respiration		
Excretion			
adult	8.7% of consumption [b]	Elliott, 1976	2.01×10^{10} J · d^{-1}
juvenile	8.7% of consumption [b]	Elliott, 1976	3.59×10^{09} J · d^{-1}
Egestion			
adult	22.4% of consumption [b]	Elliott, 1976	5.17×10^{10} J · d^{-1}
juvenile	22.4% of consumption [b]	Elliott, 1976	9.25×10^{09} J · d^{-1}
Consumption			
adult	equation; see reference	Elliott, 1976	2.31×10^{11} J · d^{-1}
juvenile	equation; see reference	Elliott, 1976	4.13×10^{10} J · d^{-1}
Import	13% of total salmonid import	calc. using Flint, 1986 and Savoie and LeTendre, 1991	1.13×10^{10} J · d^{-1}
Export	10% of production	Flint, 1986	7.11×10^{09} J · d^{-1}
Rainbow trout			
Biomass		modelled after lake trout	
adult	1.75×10^9 g	based on Savoie and LeTendre, 1991	1.54×10^{13} J
juvenile	1.94×10^8 g	none	1.20×10^{12} J
Production			
adult	$P/B = 0.2 \cdot yr^{-1}$	none	8.44×10^{09} J · d^{-1}
juvenile	$P/B = 0.2 \cdot yr^{-1}$	none	6.58×10^{08} J · d^{-1}
Respiration			
adult	equation; see reference	Stewart et al., 1983	6.32×10^{10} J · d^{-1}
juvenile	equation; see reference	Stewart et al., 1983	1.13×10^{10} J · d^{-1}
SDA			
adult	13.4% of consumption [b]	Stewart et al., 1983	1.72×10^{10} J · d^{-1}
juvenile	13.9% of consumption [b]	Stewart et al., 1983	2.86×10^{09} J · d^{-1}
Excretion			
adult	8.4% of consumption [b]	Stewart et al., 1983	1.08×10^{10} J · d^{-1}
juvenile	8.7% of consumption [b]	Stewart et al., 1983	1.79×10^{09} J · d^{-1}
Egestion			
adult	22.3% of consumption [b]	Stewart et al., 1983	2.85×10^{10} J · d^{-1}
juvenile	19.4% of consumption [b]	Stewart et al., 1983	4.00×10^{09} J · d^{-1}
Consumption			
adult	computed	this reference	1.28×10^{11} J · d^{-1}
juvenile	computed	this reference	2.06×10^{10} J · d^{-1}
Import	10% of total salmonid import	calc. using Flint, 1986 and Savoie and LeTendre, 1991	8.24×10^{09} J · d^{-1}
Export	10% of production	Flint, 1986	9.10×10^{08} J · d^{-1}

[a] Values converted through application of assumptions outlined in Table 1.
[b] Computed using equation from reference cited.

3.1. Detritus

We assumed that the detrital concentration in Lake Ontario was 1 mg (dry) $\cdot$ l^{-1}. The energy content of the detritus is 4421 kcal $\cdot$ g^{-1} (dry) (Cummins and Wuycheck, 1971), or 18506 J $\cdot$ g^{-1} (dry), thus the standing stock of detritus in Lake Ontario was estimated as 1.60×10^6 J $\cdot$ m^{-2}.

Kemp and Harper (1976) reported that sources of suspended solids include rivers, eroding shoreline bluffs, atmospheric, dredged spoils as well as autochthonous organic matter. They estimated that the total annual input of suspended solids from these sources was 9.14×10^6 metric tons (t). We converted this load to 8.67×10^5 J $\cdot$ m^{-2} $\cdot$ yr^{-1} or 2.37×10^3 J $\cdot$ m^{-2} $\cdot$ d^{-1}.

Kemp and Harper (1976) reported that 3.44×10^6 t $\cdot$ yr^{-1} of suspended solids leave through the St. Lawrence River, while approximately 4.77×10^6 t $\cdot$ yr^{-1} are deposited on the lake bottom and buried. We estimated that these losses amounted to 7.79×10^5 J $\cdot$ m^{-2} $\cdot$ yr^{-1} or 2.13×10^3 J $\cdot$ m^{-2} $\cdot$ d^{-1}.

3.2. Phytoplankton

Biomass

Munawar et al. (1974,1987), Vollenweider et al. (1974) and Gray (1987) studied the Lake Ontario phytoplankton intensively. Vollenweider et al. (1974) reviewed the available information on species composition, biomass, and primary production of phytoplankton in the Great Lakes. Vollenweider et al. (1974) reported that the lakewide biomass of phytoplankton in Lake Ontario during 1970 (monitored for the entire year) was approximately 2.7 g $\cdot$ m^{-3} (ranging from 1.4 to 5.9 g $\cdot$ m^{-3} throughout the year), and concluded that there were distinct biomass differences between the offshore and nearshore regions of the lake.

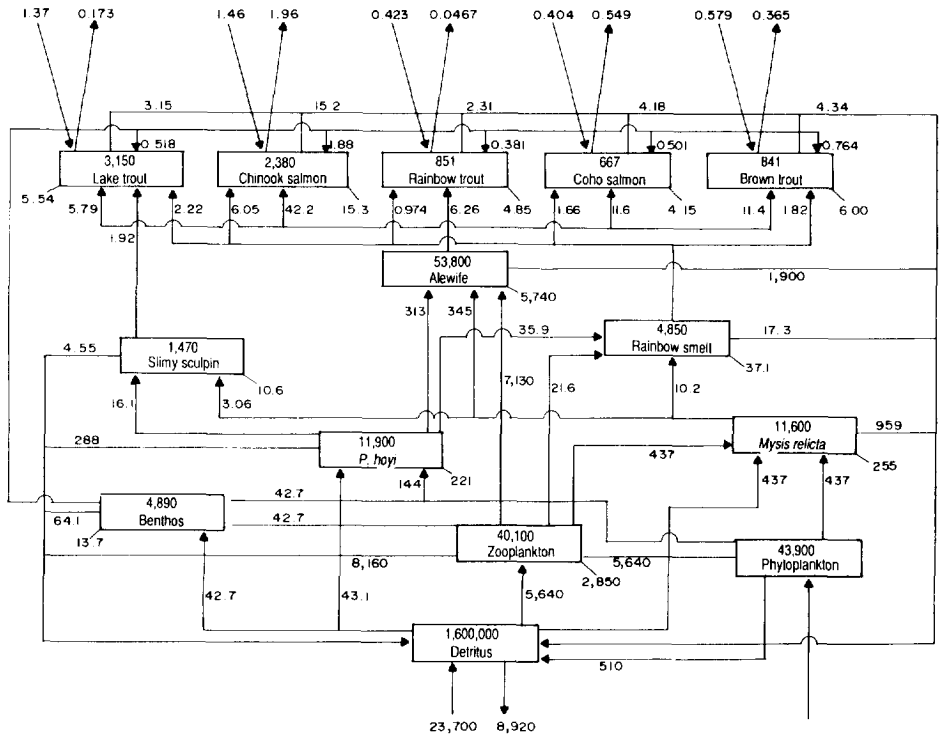

Fig. 3. The food web as obtained from the data analysis [Units in boxes are Joules (J) and fluxes in J $\cdot$ day^{-1}]

Differences between offshore and nearshore phytoplankton communities have been studied by Munawar et al. (1974,1987) and Gray (1987). Munawar et al. (1974) estimated the 1973 midlake mean annual biomass as 0.7 $g \cdot m^{-3}$, with a range of 0.2 to 1.6 $g \cdot m^{-3}$. Gray (1987) reported a biomass of 0.41 $g \cdot m^{-3}$ (range 0.10 to 2.40 $g \cdot m^{-3}$) in 1982. Gray also observed that the biomass at a northshore station (April to November, 1982) was 39% higher than at the midlake station. Munawar et al. (1987) stated that in 1983 the midlake concentration of phytoplankton was 0.35 $g \cdot m^{-3}$, and concluded that there were significant community structural changes occurring in the pelagic region of the lake.

Lakewide surveys of phytoplankton standing stocks were performed in 1970 (27–30 stations, January to December) and 1978 (22 stations, April to September) (Munawar et al., 1987). The 1970 concentrations were reported as 2.0 and 5.3 $g \cdot m^{-3}$, in the spring and summer, respectively. Similarly, concentrations of 1.1 and 1.2 $g \cdot m^{-3}$ were reported for 1978. Munawar et al. (1987) concluded that the lakewide data showed an overall decrease in total phytoplankton from 1970 to 1978.

Due to the differences in the biomass between the nearshore and offshore locations (Gray, 1987), we chose not to include values pertaining to these spatially segregated areas in our determination of an estimated lakewide annual biomass. We also rejected the 1970 lakewide, all-season value of 2.7 $g \cdot m^{-3}$, reported by Vollenweider et al. (1974), due to the conclusion that total phytoplankton biomass has decreased over the years (Munawar et al., 1987). Thus, in order to estimate the lakewide biomass, we chose the lakewide seasonal data reported by Munawar et al. (1987) (although we acknowledge the fact that using these data will no doubt result in an overestimation due to the seasonal variability, in addition to the supposed decrease in biomass over time). We simply took the mean of the values reported for 1978 (i.e. 1.1 and 1.2 $g \cdot m^{-3}$), and estimated the lakewide annual biomass as 1.15 $g \cdot m^{-3}$, or 99.1 $g \cdot m^{-2}$.

The energy density of phytoplankton, 3482 cal $\cdot g^{-1}$ (dry) (Cummins and Wuycheck, 1971), was converted to 1458 $J \cdot g^{-1}$, assuming that the dry weight was 10% of the wet weight. Thus, the standing stock of phytoplankton in Lake Ontario was calculated to be approximately 1.45×10^5 $J \cdot m^{-2}$.

Production

The literature search uncovered some studies with measurements of the primary production in Lake Ontario (Munawar et al., 1974,1987; Stadelmann et al., 1974; Vollenweider et al., 1974). Unfortunately these studies entail data collected from the early 1970s, however, due to the lack of availability of more recent estimates we had to use these data as the basis for our assumed phytoplankton production.

Munawar et al. (1974) monitored the production of phytoplankton in Lake Ontario at a midlake station during 1972–1973. They presented the data in terms of mg $_{14}C \cdot m^{-3} \cdot h^{-1}$. The mean annual amount was 8.1 mg $_{14}C \cdot m^{-3} \cdot h^{-1}$. Stadelmann et al. (1974), who also reported in terms of carbon, studied an offshore station in Lake Ontario from April, 1972 through to March, 1973. The production during this period ranged from a low of 58 mg $C \cdot m^{-3} \cdot d^{-1}$ (during the month of January) to a high of 1443 mg $C \cdot m^{-3} \cdot d^{-1}$ (during the month of September).

More recently (Munawar et al., 1987), data collected from a midlake station of the lake in 1983 have been analyzed to determine a production–biomass coefficient (in terms of mg $C \cdot m^{-3} \cdot d^{-1}/mg \cdot m^{-3}$). The production–biomass coefficients were reported as 10, 120, and 60 in the months of May, July, and September, respectively. We acknowledge the fact that the use of these data in our estimated production will bias the rate towards the summer months, as well as the offshore regions of the lake, however we arbitrarily decided that this method was better than using production values reported for the early 1970s. Taking into account the lower production rates in the winter months, we estimated the production–biomass ratio to be about 40 mg $C \cdot m^{-3} \cdot d^{-1}/mg \cdot m^{-3}$. We converted this to approximately 46.0 g $C \cdot m^{-3} \cdot d^{-1}$, and assuming a conversion factor of 14.6 J per mg C (C. Gray, pers. commun.), we estimated production to be 7790 $J \cdot m^{-2} \cdot d^{-1}$.

Sedimentation

We assumed that the sedimentation rate of phytoplankton from Lake Ontario was approximately 1 $m \cdot d^{-1}$. With a presumed phytoplankton biomass of 1.15 $g \cdot m^{-3}$, we calculated a sedimentation rate of 1.15 $g \cdot m^{-2} \cdot d^{-1}$, or 1680 $J \cdot m^{-2} \cdot d^{-1}$.

3.3. Zooplankton

Biomass

Borgmann et al. (1984), Makarewicz and Jones (1990), and Johannsson and O'Gorman (1991) quantified the biomass of zooplankton in Lake Ontario. The most recent study (Johannsson and O'Gorman, 1991) investigated the structure of epilimnetic zooplankton in Lake Ontario. Samples were collected from the western and eastern basins, midlake and along the south shore of Lake Ontario from mid-July to mid-October, 1981 through 1986. These samples were taken from 1 m above the top of the thermocline or from a surface depth of 20 m (which ever was the least distance) using a 70 μm mesh net of 0.3 m diameter in 1981 and 1982, which was replaced with a net of 64 μm and 0.5 m diameter in 1983. Johannsson and O'Gorman (1991) found that the difference in mouth diameter of the net had no effect on sampling efficiency, and concluded that the abundance estimates of cladocerans and copepods were not likely to be affected by the difference in mesh size.

Through application of zooplankton weight estimates (Johannsson and O'Gorman, 1991) to seasonal mean zooplankton abundance at each station for each year of the study (Johannsson and O'Gorman, 1991), we were able to calculate an average summertime (mid-July to mid-October) biomass of zooplankton in Lake Ontario. We calculated this biomass to be approximately 2.95 g (dry) $\cdot m^{-2}$.

Stewart and Binkowski (1986) stated that the energy content of cladocerans and copepods from Lake Michigan were 1674 and 2300 $J \cdot g^{-1}$, respectively. Assuming the total Lake Ontario zooplankton biomass was approximately 40% cladocerans and 60% copepods (estimated from calculations using data presented in Johannsson and O'Gorman, 1991), we estimated that the average energy density of zooplankton in Lake Ontario was 2050 $J \cdot g^{-1}$. Using this conversion factor and the biomass estimated from Johannsson and O'Gorman (1991), we approximated there was 6.05×10^4 $J \cdot m^{-2}$ of zooplankton in Lake Ontario. We acknowledge the fact that this average value is for the period mid-July to mid-October, and thus, the annual standing stock of zooplankton in Lake Ontario is probably lower, as suggested by the data collected by Makarewicz and Jones (1990).

Makarewicz and Jones (1990) investigated the occurrence of *Bythotrephes cederstromemi* in Lake Ontario and gave a detailed analysis of the seasonal biomass of the offshore zooplankton. They monitored two stations (10 m and 100 m) near Hamlin Beach State Park biweekly from January through December, 1987, using a 68 μm mesh net. At the 100 m depth station they sampled the upper 50 m of the water column, and the upper 8 m at the 10 m station. Makarewicz and Jones (1990) stated that the average annual zooplankton biomass was 23.41 mg (dry) $\cdot m^{-3}$, or 2.02 g (dry) $\cdot m^{-2}$. This value is 0.93 g (dry) $\cdot m^{-2}$ less than the value calculated using the data collected by Johannsson and O'Gorman (1991).

Barber et al. (1991) studied the bioaccumulation of organic pollutants and reported the concentration of grazeable zooplankton in Lake Ontario as 1.4×10^{-3} g (wet) $\cdot l^{-1}$, or 12.1 g (dry) $\cdot m^{-2}$. This concentration was exceptionally high and investigation into the source (Scavia, 1980) of this estimate resulted in the discovery that the monitoring of the lake occurred prior to 1975.

Production

The study by Johannsson and O'Gorman (1991) also investigated the seasonal (mid-July to mid-October, 1981 to 1986) production by zooplankton at various stations in Lake Ontario. Using these data we computed an average seasonal production by epilimnetic zooplankton of 13.99 g (dry) $\cdot m^{-2}$. By assuming that the energy density of zooplankton from Lake Ontario was 2050 $J \cdot g^{-1}$, we estimated that the average annual production by zooplankton species was 2.87×10^5 $J \cdot m^{-2} \cdot yr^{-1}$, or 7.86×10^2 $J \cdot m^{-2} \cdot d^{-1}$. As with

the biomass data taken from this study (Johannsson and O'Gorman, 1991), we acknowledge this production rate is for the period of mid-July to mid-October, and thus, the actual average annual production is probably different due to seasonal variation.

For comparison, the annual average lakewide zooplankton production in the early 1981 (March to December) was reported as 15.02 g (dry) $\cdot$ m^{-2} (Borgmann et al., 1984). This value is a result of the calculation of data collected from the western and eastern basins, midlake, as well as from nearshore stations during 1981.

Respiration / SDA

Very little data has been published on the respiration of zooplankton in freshwater. James (1987) stated that the zooplankter *Ceriodaphnia dubia*, from an eutrophic lake in New Zealand, consumed 0.002 and 0.76 μl $O_2 \cdot \text{animal}^{-1} \cdot h^{-1}$ in the hypolimnion and the epilimnion, respectively. In addition, the CLEAN model (Park et al., 1974; Scavia et al., 1974) reported that the maximum respiration rate of cladocerans, copepods and omnivorous zooplankton was 0.01 g $O_2 \cdot g^{-1} \cdot d^{-1}$.

Devol (1979) developed a series of equations relating respiration rate to the weight of the organism, in addition to the environmental temperature:

$$\ln R = -5.68 + 0.74 * \ln W + 0.08 * T$$

($r^2 = 0.92$, $n = 38$) for freshwater copepods, and

$$\ln R = -4.48 + 0.85 * \ln W + 0.10 * T$$

($r^2 = 0.98$, $n = 39$) for cladocerans and rotifers; where R = respiration rate [g $O_2 \cdot g^{-1} \cdot d^{-1}$], W = organism weight [μg dry], and T = temperature [°C].

In order to use these relationships we had to make assumptions regarding zooplankton mass. The mean weight of the copepods and cladocerans/rotifers in Lake Ontario were estimated as 1.9 and 2.6 μg (dry) (using information in Johannsson and O'Gorman, 1991). From the application of these weights to the appropriate equations (and assuming an environmental temperature of 10°C) we computed the respiration rates of the copepods and cladocerans/rotifers to be 0.0122 and 0.0693 g $O_2 \cdot g^{-1} \cdot d^{-1}$, respectively (note that both these rates are higher than the maximum rate suggested by the above mentioned CLEAN model). By assuming that the total Lake Ontario zooplankton biomass was approximately 40% cladocerans and 60% copepods (see above), we estimated the overall zooplankton population respiration as 0.0350 g $O_2 \cdot g^{-1} \cdot d^{-1}$. We converted this rate to 0.103 g $O_2 \cdot m^{-2} \cdot d^{-1}$, or 1460 $J \cdot m^{-2} \cdot d^{-1}$ by assuming a general oxycaloric value of 14 150 $J \cdot g^{-1}$ O_2 (Elliott and Davison, 1975). Due to lack of data pertaining to the SDA requirements of zooplankton, we assumed it was included in the above rate.

Excretion / egestion

Literature on the excretion and egestion rates of freshwater zooplankton is extremely scarce. Welch (1968) reported an average assimilation efficiency of 0.20 (range 0.137–0.331) for *Daphnia pulex*. By using Welch's definition, we concluded that the egestion/excretion for this organism was 0.80 times that of consumption.

In addition, we calculated from the CLEAN model (Park et al., 1974; Scavia et al., 1974) that the egestion and excretion by copepods, cladocerans, and omnivorous zooplankton were 65% and 3% of total consumption, respectively. This calculation gave a total egestion/excretion rate of 0.68. Leidy and Ploskey (1980) stated that reported food assimilation efficiencies for zooplankton range from 2 to 99% in the published literature. They suggested that a food assimilation factor can randomly be selected from 0.05 to 0.55, thus resulting in an egestion/excretion factor of 0.95 to 0.45. The value we have computed from the CLEAN model clearly falls within this range.

Consumption

Using Eq. 1 we calculated that the zooplankton in Lake Ontario would consume approximately 7.02×10^3 $J \cdot m^{-2} \cdot d^{-1}$. Due to the scarcity of information on the feeding habits of zooplankton in Lake Ontario, we assumed that this group of organisms obtain roughly 50% of its nutritive energy from phytoplankton and 50%

from detrital material. This assumption was based on the recommendation of Leidy and Ploskey (1980) to give detritus equal ranking with other dietary items. Conversely, Flint (1986) speculated that zooplankton consumed 100% phytoplankton. However, Flint (1986) who developed a model of carbon flow through the Lake Ontario food web, did not include a detrital pool.

Sedimentation

We assumed that the sedimentation rate of zooplankton was approximately 1 $m \cdot d^{-1}$. Applying this rate to the zooplankton biomass (see above) of 2.95 g (dry) $\cdot m^{-2}$, we calculated the sedimentation rate as 3.42×10^{-2} g (dry) $\cdot m^{-2} \cdot d^{-1}$, or 6.27×10^{2} $J \cdot m^{-2} \cdot d^{-1}$. We assumed that this loss from the zooplankton compartment was gained by the detritus compartment.

3.4. *Mysis relicta*

Biomass

Carpenter et al. (1974) measured the biomass of *M. relicta* in 1971 in Lake Ontario at various depth intervals from 0 to 225 m. However, these data were not utilized here since they were reported in terms of numbers, not mass, and conversion to mass would involve assumption as to the mean size of the mysids sampled during this monitoring program. Shea and Makarewicz (1989) reported a biomass of *M. relicta* in Lake Ontario of 0.08 and 0.68 g (dry) $\cdot m^{-2}$ at 35 and 100 m respectively, during the period May to November, 1984. Although abundance of *Mysis* appears to be depth related (O. Johannsson, pers. commun.) it was necessary to use these limited data to estimate the lakewide annual biomass. These values resulted in an estimated lakewide biomass similar to that reported for other Laurentian Great Lakes (Sells, 1982). Assuming the average dry weight of a mysid was 21% its weight (Evans and Landrum, 1989) and the energy content of the organism was 4604 $J \cdot g^{-1}$ (Stewart et al., 1983), we estimated that the standing stock of *M. relicta* in Lake Ontario was 1.16×10^{4} $J \cdot m^{-2}$.

Production

Data availability on the production of this organism in Lake Ontario is also very limited. Shea and Makarewicz (1989) reported a production by mysids in Lake Ontario of 0.13 and 1.23 g (dry) $\cdot m^{-2}$ per 7 months (i.e. May to November, 1984) at water depths of 35 and 100 m, respectively. Due to lack of other published data, it was necessary to use these values in the estimation of annual lakewide production by mysids. We calculated an annual production of 1.64 g (dry) $\cdot m^{-2}$. We acknowledge the fact that this estimate is biased towards the summer months and does not take into account the reduced production during the winter months. This estimate is similar to production values reported for Lake Michigan mysid populations (Sells, 1982). Flint (1986) used a higher value but he did not document the basis of his estimate and therefore it was not utilized here. Thus, we estimated that the production was 3.60×10^{4} $J \cdot m^{-2} \cdot yr^{-1}$, or 9.85×10^{1} $J \cdot m^{-2} \cdot d^{-1}$.

Respiration / SDA

Literature regarding energy loss by *M. relicta* through the process of respiration is extremely limited. Sandeman and Lasenby (1980) reported relationships between oxygen consumption and body weight at various environmental temperatures and ambient oxygen levels. This information was not used because introduction of the effects of dissolved oxygen levels would only serve to further complicate the food web representation.

Lasenby and Langford (1972) used data collected from a southern Ontario lake in the early 1970s to develop a series of regression equations which related oxygen consumption to body size at a variety of environmental temperatures. Assuming that the preferred temperature of *Mysis* ranged from 4 to 7°C, using these relationships (at 4 and 7°C) and assuming that the average mysid in Lake Ontario was 2.6 mg (dry) (Borgmann and Whittle, 1983), we estimated that the daily oxygen consumption was 3.78×10^{-2} g $O_2 \cdot g^{-1}$ (dry). Assuming an oxycaloric value of 14 150 $J \cdot g^{-1}$ O_2 (Elliott and Davison, 1975), we computed an energy consumption of 2.83×10^{2} $J \cdot m^{-2} \cdot d^{-1}$ for metabolic processes. It should be noted that this value included the SDA requirements (Lasenby and Langford, 1972).

Excretion / egestion

The assimilation efficiencies for *M. relicta* are utilized in the determination of the amount of energy which is ingested, but not incorporated into the organism. Lasenby and Langford (1973) proposed that the assimilation efficiency of *M. relicta* was 85% of consumption. Thomann and Connolly (1984) reported the same parameter to be 30%. By definition, these values imply the rate of egestion was 15 and 70% of consumption, respectively. Due to this large discrepancy and lack of other pertinent published data, we arbitrarily decided to utilize the data reported for mysids from the Great Lakes (Thomann and Connolly, 1984).

Search of published literature failed to produce any insight into the excretion rate of *Mysis* and therefore the excretion rate of zooplankton was used as an estimate. This value, 3% of consumption, was calculated using data presented in the CLEAN model (Park et al., 1974; Scavia et al., 1974).

Consumption

Using Eq. 1 we calculated that the mysids in Lake Ontario would consume 1.41×10^3 $J \cdot m^{-2} \cdot d^{-1}$. *M. relicta* derives its nutritive energy from phytoplankton, zooplankton and detritus (McWilliam, 1970 cited in Grossnickle, 1982; Lasenby and Langford, 1973; Bowers and Grossnickle, 1978; Parker, 1980). Parker (1980) also demonstrated that *Mysis* will prey on *P. hoyi*, although this was observed in a microcosm investigation. Thus, we assumed that the consumption of *P. hoyi* is minimal with respect to total energy intake in the natural environment. Due to lack of published data regarding the importance of each compartment, we assumed that all have equal proportions with respect to energy supply.

3.5. Benthos

Biomass

Numerous studies have been performed on the abundance of benthic organisms in Lake Ontario (Brinkhurst, 1970; Johnson and Brinkhurst, 1971; Kinney, 1972; Cook and Johnson, 1974; Johannsson et al., 1985), but only a few provide enough data to make a reasonable estimate of lakewide biomass. The difficulty arises because most studies have reported biomass as a function of the number of organisms per unit area or unit volume rather than mass, and thus these studies were not utilized.

Cook and Johnson (1974) reported that the lakewide biomass of macrobenthos in 1971 was 1840 mg (dry) $\cdot m^{-2}$. This value overestimates the biomass of benthos since it includes the biomass of *P. hoyi*. This value could not used because Cook and Johnson did not publish what portion of the population was *P. hoyi*.

Johannsson et al. (1985) reported benthic fauna biomass in Lake Ontario at various depths during April, July and November, 1981 through 1983. The total faunal biomass was 2554.8 and 584.8 mg (dry) $\cdot m^{-2}$ at the depths of 70 and 105 m, respectively. However, these total fauna values include the biomass of both *Pontoporeia* and bottom dwelling mysids and therefore overestimate the biomass of benthos. Using the *Pontoporeia* and mysid biomass values reported (Johannsson et al., 1985) we adjusted these values to 287.3 and 124.9 mg (dry) $\cdot m^{-2}$, respectively. Assuming the dry weight of the average benthic organism was 15% of its wet weight (Strayer and Likens, 1986) and an energy content of 3558 $J \cdot g^{-1}$ (calculated from Gardner et al., 1985), we estimated the standing stock of benthos in Lake Ontario was 4.89×10^3 $J \cdot m^{-2} \cdot d^{-1}$.

Production

The production of macrobenthos in the deep profunda of Lake Ontario was 0.037 $kcal \cdot m^{-2} \cdot d^{-1}$ (Stadelmann et al., 1974), of which 0.025 $kcal \cdot m^{-2} \cdot d^{-1}$ was by *P. hoyi*. From these data, we calculated that the production by benthic organisms (other than *P. hoyi*) was 5.03×10^1 $J \cdot m^{-2} \cdot d^{-1}$.

Respiration / SDA

Literature regarding energy loss by the benthos through respiration is extremely limited. Reports involved only selected species (Johnson and Brinkhurst, 1971; Brinkhurst et al., 1972; Brinkhurst and Austin, 1979) and it was necessary to base the respiration losses on the entire group

of organisms on these types of data. At 5°C (the assumed preferred temperature for benthos in Lake Ontario), a mixed culture of *Tubifex tubifex*, *Limnodrillus hoffmeisteri*, and *Peloscolex multisetosus* consumed 0.14 $\mu l\ O_2 \cdot mg\ (dry)^{-1} \cdot h^{-1}$ (Brinkhurst et al., 1972). Using chemical gas laws (i.e. $PV = nRT$), we converted this datum to 1.89×10^7 g $O_2 \cdot d^{-1}$, or 1.37×10^1 $J \cdot m^{-2} \cdot d^{-1}$ lakewide, assuming an oxycaloric value of 14 150 $J \cdot g\ O_2$ (Elliott and Davison, 1975). All other studies on benthic respiration did not report values measured near the preferred temperature.

Excretion / egestion

The literature search failed to produce any insight into the egestion and excretion rates of this group of organisms, and therefore, they were estimated from *Tubifex tubifex*. For *T. tubifex* the assimilation efficiency (i.e. the amount of energy utilized for growth and respiration) was 50% of the total energy consumed (Welch, 1968). This datum lead to the assumption that the egestion/excretion rate for the entire group of organisms was 50% of its total energy consumption.

Consumption

Using Eq. 1 we calculated that benthos in Lake Ontario would consume 128 $J \cdot m^{-2} \cdot d^{-1}$. It is assumed (M. Dickman, pers. commun.) that benthos obtain their energy from detritus, and settling zooplankton and phytoplankton. For our purposes we considered any consumption of the settling plankton to be consumption of detritus, which seems reasonable at the selected preferred temperature.

3.6. *Pontoporeia hoyi*

Biomass

Biomass monitoring on the status of this deep water benthic organism is found frequently in the published literature (Johannsson et al., 1985; Dermott and Corning, 1988), presumably because of its relative importance in the benthic population. Dermott and Corning (1988) monitored the biomass of *P. hoyi* at 3 sites in Lake Ontario from March 1981 through April 1983. Although this study provided reasonable estimates for the biomass, they are not utilized because the samples were collected from only 3 specific lake depths from 3 different locations.

Johannsson et al. (1985) reported that the biomass of *P. hoyi* below the 10 m contour of Lake Ontario during the period April to November, 1982 was 14.96×10^3 t dry weight. Assuming that the dry weight of the average *P. hoyi* was 27% its wet weight (Evans and Landrum, 1989) and the energy content of the organism was 4185 $J \cdot g^{-1}$ (Stewart et al., 1983), we estimated that the standing stock of *P. hoyi* in Lake Ontario was 1.19×10^4 $J \cdot m^{-2}$ (assuming the biomass above the 10 m contour was minimal).

Production

Johannsson et al. (1985) reported that the total annual production of *Pontoporeia* in 1982 was 30.99×10^3 t (dry), or 67.7 $J \cdot m^{-2} \cdot d^{-1}$.

Respiration / SDA

Literature regarding energy loss by *P. hoyi* through the process of respiration is scarce. Johannsson et al. (1985) developed a regression between respiration (R), temperature (T) and body size (W) for this organism:

$$R\ (mg\,O_2 \cdot mg^{-1} \cdot h^{-1}) = \exp(-7.19 + 0.036T - 0.219 \ln W)$$

$$(\text{mg dry weight}) \quad (r^2 = 0.60).$$

Assuming an average dry weight of *P. hoyi* of 1.34 mg (Borgmann and Whittle, 1983) and a preferred temperature of 5°C (J. Elrod, pers. commun.), we estimated that the daily oxygen consumption was 2.03×10^{-2} g $O_2 \cdot g^{-1}$ (dry). This was converted to a lakewide consumption of 3.04×10^8 g $O_2 \cdot d^{-1}$. Assuming an oxycaloric value of 14 150 $J \cdot g^{-1}\ O_2$ (Elliott and Davison, 1975), further calculations show a lakewide daily energy consumption of 221 $J \cdot m^{-2}$ for metabolic processes. It should be noted that this value included the SDA requirements (Johannsson et al., 1985).

Semenchenko (1979) utilized data collected from experimentation with *P. affinis* from Lake Yuzhnyy Volos (Byelorussia) to develop a series

of equations relating oxygen consumption to weight at various environmental temperatures. At 5.3°C (i.e. the temperature reported which was closest to the preferred temperature), the data suggest that the oxygen consumption (Q) was related to the specimen weight (W) in the following manner:

$$Q\ (\mathrm{ml\,O_2 \cdot specimen^{-1} \cdot h^{-1}}) = 0.086 \cdot W\ (\mathrm{g\,wet})^{0.845}$$

$$(n = 14 \text{ and } r = 0.94).$$

Using this relationship and a basic chemical gas law (i.e. $PV = nRT$), we estimated that *P. hoyi* in Lake Ontario would consume 204 $\mathrm{J \cdot m^{-2} \cdot d^{-1}}$ through the process of metabolism. The difference between this value and the value calculated using information from Johannsson et al. (1985) was less than 10%, and we decided to use the value determined by the information collected from Lake Ontario (Johannsson et al., 1985).

Excretion / egestion

The literature search failed to produce any insight into the egestion and excretion rates of this particular organism and therefore it was estimated from values reported for *Tubifex tubifex*. Welch (1968) reported that the assimilation efficiency (i.e. the amount of energy utilized for growth and respiration) of *Tubifex tubifex* was 50% of the total energy consumed. Thus, we also assumed that the egestion/excretion rate for *P. hoyi* was 50% of its total energy consumption.

Consumption

Using Eq. 1 we calculated *Pontoporeia* in Lake Ontario consume 577 $\mathrm{J \cdot m^{-2} \cdot d^{-1}}$. Although *P. hoyi* consumes a variety of material (i.e. bacteria, diatoms, detritus), the importance of these components in its diet has yet to be determined (Dermott and Corning, 1988). Flint (1986) assumed that this amphipod obtained 100% of its nutritional energy from phytoplankton since his model did not contain a detritus compartment. Conversely, Parker (1980) stated that *P. hoyi* obtains the majority of its dietary needs from the consumption of detritus. Johnson (1987) observed that *P. affinis* (the palaeartic form of *Pontoporeia*) from a mesotrophic lake near Stockholm consumed on average 97.6% detritus by volume. Due to the scarcity of information on the feeding habits of *P. hoyi* in Lake Ontario, we assumed that this organism obtains 100% of its nutritive energy from detrital material. We considered any settling phytoplankton consumed to be detritus, which seems reasonable at the selected preferred temperature.

3.7. Slimy sculpin

Biomass

The extensive literature search only turned up two articles that estimated the standing stock of slimy sculpin in Lake Ontario. Gray (1979) proposed that there was a minimum of 2502 t of slimy sculpin in the U.S. waters of Lake Ontario. However, a more recent estimate of slimy sculpin biomass was reported by Flint (1986). The 1985 biomass was estimated at 7.89×10^8 g (wet) in a monitored area of approximately 7.28×10^9 $\mathrm{m^2}$ (in the U.S. waters). Assuming that the energy content of the organism was 5743 $\mathrm{J \cdot g^{-1}}$ (Rottiers and Tucker, 1982), we concluded there was approximately 622 $\mathrm{J \cdot m^{-2}}$ of slimy sculpin in Lake Ontario.

Production

No published literature concerning measured production rates of slimy sculpin could be located. In spite of this lack of data, it has been estimated (Flint, 1986; Borgmann, 1985) that the planktivores of Lake Ontario possess an annual production–biomass ratio of 1. With this assumption, we estimated that the slimy sculpin produced 0.108 $\mathrm{g \cdot m^{-2} \cdot yr^{-1}}$, or 1.70 $\mathrm{J \cdot m^{-2} \cdot d^{-1}}$.

Respiration / SDA

The following estimations regarding the energy losses from respiration, excretion, and egestion by slimy sculpin are extremely uncertain. There is virtually no literature regarding the bioenergetics of this species, thus, we substituted the model for northern pike (Hewett and Johnson, 1987) and rationalized this by the fact small-sized northern

pike are planktivores. Assuming the mean size of Lake Ontario slimy sculpin was 10 g (wet), we calculated that the slimy sculpin would consume 2.42×10^{-3} g $O_2 \cdot g^{-1} \cdot d^{-1}$ (Hewett and Johnson, 1987), at its preferred temperature of 5°C (Coutant, 1977). We converted this to 3.54 $J \cdot m^{-2} \cdot d^{-1}$ using an oxycaloric value of 13560 $J \cdot g^{-1}$ O_2 (Elliott and Davison, 1975).

Manipulation of the bioenergetic equations presented in the report (Hewett and Johnson, 1987) yielded the observation that the energy lost for the process of food metabolism was equal to 11.5% of the total energy consumption.

Excretion / egestion

No literature on the excretion and egestion rates of slimy sculpin could be located. However, Warren and Davis (1967) reported that the average assimilation efficiency of the sculpin *C. perplexus* was 81.9% of its total consumption. We accepted this value for the slimy sculpin and yielded an egestion rate of 18.1% of the consumed material. Excretion studies are also absent from the published literature and it is thus necessary to use the rate of 5.7% calculated from the model for northern pike (Hewett and Johnson, 1987).

Consumption

Literature regarding the diet components of slimy sculpin from Lake Ontario is scarce. Brandt (1986a) investigated the diet of slimy sculpin from Lake Ontario during October. He reported the stomach contents of sculpin collected from the 35 m depth were 87% *P. hoyi* and 3.2% mysids by volume. Similarly, at 75 m, the proportions were 79.6% and 18.9%. Other components in the diet included insects, isopods, fingernail clams, and fish eggs (Brandt, 1986a).

In comparison, a study (Wells, 1980) on Lake Michigan slimy sculpin (40–99 mm in length) in 1965–1966 implied that the diet was made up of 96% *P. hoyi*. Wells (1980) reported that other prey for the slimy sculpin in Lake Michigan include fingernail clams, ostracods, immature midges, and fish eggs. Assuming that the energy intake of food items other than *P. hoyi* and mysids is minimal with respect to total energy intake, we assumed that the diet of slimy sculpin from Lake Ontario consisted of approximately 85% *P. hoyi* and 15% *M. relicta*, in terms of total volume. This estimate was similar to the 82% and 18% estimates of Flint (1986), however the arrival at these estimates was not similar. Flint seems to have misinterpreted the information presented in Brandt (1986a); he has used percent occurrence (i.e. the percentage of fish containing the item) to estimate the diet composition.

The total consumption (Eq. 1) of the slimy sculpin in Lake Ontario was 8.10 $J \cdot m^{-2} \cdot d^{-1}$. Using previously stated energy contents for mysids and *P. hoyi* and the above estimated diet, we calculated that the daily intake by slimy sculpin was 1.30 $J \cdot m^{-2}$ of *M. relicta* and 6.80 $J \cdot m^{-2}$ of *P. hoyi*.

3.8. Rainbow smelt

The energetics of rainbow smelt was calculated in a manner different from all other fishes in this food web model. Since an average lakewide consumption by rainbow smelt in Lake Ontario was available (D. Stewart, pers. commun.), we used this information directly (rather than calculating consumption using Eq. 1). Virtually no information was found on the respiration of this species, thus it was necessary to calculate it by the substitution of the remaining known parameters into Eq. 1.

Production

No published literature concerning measured production rates of rainbow smelt could be located. In spite of this lack of data, it has been estimated (Borgmann, 1985; Flint, 1986) that the planktivores of Lake Ontario possess an annual production–biomass ratio of 1. Recent research by Stewart et al. (pers. commun.) has suggested that the production by rainbow smelt was 0.464 $g \cdot m^{-2} \cdot y^{-1}$, or an equivalent annual production–biomass ratio of 1.1. We calculated this production rate to be equal to 8.46 $J \cdot m^{-2} \cdot d^{-1}$.

Biomass

Rainbow smelt in Lake Ontario is a key prey species (Brandt, 1986b; Brandt and Madon, 1986)

and it supplies much of the energy to the higher trophic levels. Currently the abundance of smelt in Lake Ontario is high (Kerr and LeTendre, 1991), although the total biomass is low (Kerr and LeTendre, 1991; D. Stewart, pers. commun.) due to the smaller and younger smelt present.

The biomass of rainbow smelt was estimated by utilization of recent research by Stewart et al. (pers. commun.). Application of their estimated annual production–biomass ratio to their estimated production rate (see above) allowed us to calculate a biomass of approximately 0.422 $g \cdot m^{-2}$. Assuming that the energy content of rainbow smelt was 6656 $J \cdot g^{-1}$ (Rottiers and Tucker, 1982), the total rainbow smelt in the lake measured approximately 2.81×10^3 $J \cdot m^{-2}$.

Excretion / egestion

Virtually no literature regarding the excretion/egestion by rainbow smelt could be located, thus we substituted the model for northern pike (Hewett and Johnson, 1987) with the rationale that both rainbow smelt and northern pike are from the order Salmoniformes. We calculated that the northern pike egestion and excretion rates as 20% and 5.6% of consumption, and we adopted these values for rainbow smelt.

Consumption

The annual consumption rate (D. Stewart, pers. commun.) by rainbow smelt in Lake Ontario was reported to be 2.977 $g \cdot m^{-2}$, or approximately 8.16×10^{-3} $g \cdot m^{-2} \cdot d^{-1}$. The diet of rainbow smelt from Lake Ontario has yet to be documented (Mathers and Stewart, 1990), although its consumption of both *Mysis* and *Pontoporeia* has been investigated (Brandt and Madon, 1986). Limited dietary information has also been published for rainbow smelt from the Bay of Quinte (Hurley, 1986). J. Elrod (pers. commun.) suggested that the diet of rainbow smelt consisted of 10% *Mysis*, 40% *P. hoyi* and 50% zooplankton, with respect to weight.

Through application of this suggested diet to the overall consumption value (see above), we calculated the rainbow smelt in Lake Ontario would consume 8.16×10^{-4} $g \cdot m^{-2} \cdot d^{-1}$ of *Mysis*, 3.26×10^{-3} $g \cdot m^{-2} \cdot d^{-1}$ of *Pontoporeia*, and 4.08×10^{-3} $g \cdot m^{-2} \cdot d^{-1}$ of zooplankton. Using previously stated energy contents of these groups of organisms, we computed these to be equivalent to a daily energy intake of 3.76 $J \cdot m^{-2}$ *Mysis*, 13.7 $J \cdot m^{-2}$ *Pontoporeia*, and 8.36 $J \cdot m^{-2}$ zooplankton.

Respiration / SDA

Using Eq. 1 we calculated that the rainbow smelt in Lake Ontario used approximately 10.7 $J \cdot m^{-2} \cdot d^{-1}$ for metabolic processes (i.e. respiration and SDA). By assuming an oxycaloric value of 13 560 $J \cdot g^{-1}$ O_2 (Elliott and Davison, 1975), this value equated to approximately 7.89×10^{-4} g $O_2 \cdot m^{-2} \cdot d^{-1}$, or 3.49×10^{-4} g $O_2 \cdot g^{-1} \cdot d^{-1}$.

3.9. Alewife

Biomass

Alewife is the most important and abundant forage fish in the Lake Ontario ecosystem (Johannsson and O'Gorman, 1991) and significant amounts of literature have been published about this organism. The biomass of alewife in Lake Ontario has been estimated (Gray, 1979; O'Gorman and Schneider, 1986; O'Gorman et al., 1987; Bergstedt and O'Gorman, 1989) for a number of years.

Gray (1979) reported an estimated 25 546 t of alewife in the U.S. waters of Lake Ontario in 1978. However, due to the sharp fluctuations in the population size of alewife (Sonzogni et al., 1983), we chose to utilize data which encompassed a number of years, rather than data from a single year.

Standing stocks in the U.S. waters of Lake Ontario were approximated by monitoring from late April to early May in the years 1978 through to 1985 (O'Gorman et al., 1987). From this monitoring program, we estimated there was 8.41×10^{10} g of adult alewife in the U.S. waters (9.1×10^9 m^2), or 9.24 $g \cdot m^{-2}$. Similarly, there was 3.60×10^9 g of yearlings, or 0.396 $g \cdot m^{-2}$.

The seasonal variation of caloric content of alewife in Lake Michigan has been reported by a variety of researchers (Rottiers and Tucker, 1982; Flath and Diana, 1985; Stewart and Binkowski, 1986). For the period April to November, it was

calculated that the energy content of alewife in Lake Michigan was roughly 6900 $J \cdot g^{-1}$ (calculated from Stewart and Binkowski, 1986; Flath and Diana, 1985; Rottiers and Tucker, 1982). However, J. Elrod (pers. commun.) advised that the energy value for alewives was much smaller in Lake Ontario than in Lake Michigan; we estimated that the alewife in Lake Ontario had an energy content of 6000 $J \cdot g^{-1}$. Using this value for energy content, we estimated that the standing stock of alewives in Lake Ontario was 5.78×10^4 $J \cdot m^{-2}$; 5.54×10^4 $J \cdot m^{-2}$ of adult alewife and 2.37×10^3 $J \cdot m^{-2}$ of yearlings.

Production

No published literature concerning measured production rates of alewife in Lake Ontario could be located. However, Brandt (1980) has reported an annual production to biomass ratio of 1.56 for the alewife in Lake Michigan. Adopting this rate for the Lake Ontario alewife we estimated that the adult alewife produced approximately 237 $J \cdot m^{-2} \cdot d^{-1}$, while the juvenile produced 10.1 $J \cdot m^{-2} \cdot d^{-1}$.

Respiration / SDA

Assuming that the mean size of Lake Ontario adult alewife was 32 g (wet) (estimated using data presented in Stewart et al., 1983), we calculated that the adult alewife would consume 2.09×10^{-2} g $O_2 \cdot g^{-1} \cdot d^{-1}$ (Stewart and Binkowski, 1986), at a preferred temperature of 16°C (Stewart and Binkowski, 1986). We converted this value to 0.193 $g \cdot m^{-2} \cdot d^{-1}$, and assuming an oxycaloric value of 13560 $J \cdot g^{-1}$ O_2 (Elliott and Davison, 1975), we computed a daily energy consumption of 2620 $J \cdot m^{-2} \cdot d^{-1}$ for respiratory processes.

Similarly, we computed that the juvenile alewife would consume oxygen at a rate of 0.175 g $O_2 \cdot g^{-1} \cdot d^{-1}$, assuming a average weight of 5.9 g (wet) (estimated using data presented in Stewart et al., 1983) and a preferred temperature of 20°C (Stewart and Binkowski, 1986). We converted this oxygen consumption rate to an energy consumption rate of 940 $J \cdot m^{-2} \cdot d^{-1}$.

Energy used for the process of food metabolism was modelled separately from respiration (Stewart and Binkowski, 1986). Manipulation of the equations presented in the report yield the observation that the energy lost to this process was equal to 14.7% of the total energy consumption for both the juvenile and adult alewife.

Excretion / egestion

The bioenergetic model (Stewart and Binkowski, 1986) for alewife suggested that the egestion and excretion rates were 16% and 8.4% of consumption, respectively. We used these parameters for all alewife in Lake Ontario.

Consumption

The composition of the alewife diet has been investigated by many researchers (Gannon, 1976; Brandt, 1980; Wells, 1980; Brandt et al., 1987; Hewett and Stewart, 1989; Keilty, 1990), with a large majority of data from Lake Michigan. Young alewives from Lake Michigan feed almost exclusively on copepods, *Daphnia* and *Bosmina* (Brandt, 1980). Midwater trawls from Lake Michigan (Wells, 1980) implied that alewife less than 179 mm obtained 90–100% of their nutrition from zooplankton organisms. Data presented in Hewett and Stewart (1989) suggested that the average year round consumption by young alewives was approximately 95% zooplankton, 4% *P. hoyi*, and 1% *Mysis* with respect to weight. Using this same study (i.e. Hewett and Stewart, 1989), we estimated the adult diet to be 60% zooplankton, 30% *P. hoyi*, and 10% *Mysis*. Predation upon yellow perch has also been observed (Brandt et al., 1987) in the eastern portion of Lake Ontario, although the percent occurrence is relatively low (0–41%).

The above estimated diets (i.e. from Hewett and Stewart, 1989) were converted to portions with respect to energy through application of the assumed energy values for each compartment (see Table 2 for conversion values). Thus, the diet of adult alewife was assumed to consist of 42% zooplankton, 43% *P. hoyi*, and 15% *Mysis* with respect to energy, while the juvenile alewife diet was computed as 90% of zooplankton, 8.0% of *P. hoyi*, and 2.0% of *Mysis*.

Using Eq. 1 we calculated that the adult alewife in Lake Ontario required approximately 4820 $J \cdot m^{-2} \cdot d^{-1}$. Thus, the daily intake by the Lake

Ontario adult alewives was approximately 2020 $J \cdot m^{-2}$ of zooplankton, 2070 $J \cdot m^{-2}$ of *Pontoporeia*, and 723 $J \cdot m^{-2}$ of *Mysis*.

Similarly, we computed that the juvenile alewife would consume about 1600 $J \cdot m^{-2} \cdot d^{-1}$; 1440 $J \cdot m^{-2} \cdot d^{-1}$ of zooplankton, 128 $J \cdot m^{-2} \cdot d^{-1}$ of *P. hoyi*, and 32.0 $J \cdot m^{-2} \cdot d^{-1}$ of *Mysis*.

3.10. Salmonids

The portion of the food web dealing with both the trout and salmon species is extremely speculative. Very little significant data regarding these top predators in Lake Ontario have been published; many inferences have been made, thus resulting in the information on these species being truly rough estimates (and often not based on any realistic published data values).

Stocking imports

The Lake Ontario fish stocking program annual report presents the number of fishes stocked by both the New York State Department of Environmental Conservation and the Ontario Ministry of Natural Resources. The 1991 report (Savoie and LeTendre, 1991) provided stocking numbers, in addition to the number of fish per pound, at various locations around the lake for the year 1990. Manipulation of the data presented in the report enabled us to calculate the total mass of each species stocked. The annual stocking rates in 1990 are presented in Table 4a.

Table 4
(a) Salmonid stocking in 1990 and (b) salmonid harvest in 1989

(a) Salmonid stocking

Species	Stocking ($kg \cdot m^{-2} \cdot yr^{-1}$)	Calculated mean weight (g wet)	Calculated mean energy density ($J \cdot g^{-1}$ wet)	Stocking ($J \cdot m^{-2} \cdot d^{-1}$)
Rainbow trout	7.75×10^{-7}	63	5895	0.0125
Brown trout	2.56×10^{-6}	59	5883	0.0414
Lake trout	3.77×10^{-6}	29	5791	0.0608
Chinook salmon	8.19×10^{-7}	5	5768	0.0132
Coho salmon	5.56×10^{-7}	16	5780	0.00898

(b) Salmonid harvest

Species	# harvested weight (g wet)	Assumed mean density ($J \cdot g^{-1}$ wet)	Calculated mean energy ($J \cdot m^{-2} \cdot d^{-1}$)	Harvest
Rainbow trout	96 114	3870	12 105	0.633
Brown trout	49 874	3270	11 638	0.267
Lake trout	45 972	4350	12 479	0.351
Chinook salmon	231 266	7880	11 751	3.01
Coho salmon	36 122	3420	9137	0.159

In order to convert the stocking rates to energy units (i.e. Joules), it was necessary to obtain an estimate of energy density. Weighted mean mass for the individual organism was computed for each species (i.e. using fish per pound data, and number of organisms data from Savoie and Le-Tendre, 1991) (see Table 4a). We then applied these weights to the appropriate formulas to calculate an estimated energy content for fish of these respective sizes (Table 4a), and thus estimated respective stocking rates in energy terms (Table 4a).

Fishing exports

Removal of salmonids from Lake Ontario due to harvest have been presented by Kerr and Le-Tendre (1991) (Table 4b). It was necessary to convert these numbers of fish to an approximated mass, in order to estimate the energy associated with the harvests. Brandt (1986b) reported maximum and minimum weights of each species taken during fishing tournaments in 1983 and 1984. Assuming that the weights of the fish caught were normally distributed, we computed the mean mass of the fish removed from the lake, and assumed this mass to be the average mass of the fish taken from the lake in 1989 (Table 4b). We then applied these weights to the appropriate formulae to calculate an estimated energy content for fish of these respective sizes (Table 4b).

The next process in the computation of the energy harvested from the lake was to apply the calculated mass and energy content to the estimated numbers removed for each species. As a result, we computed the rate of salmonid removal from the lake in 1989 in terms of energy (Table 4b).

Diet

Adult / juvenile. Feeding habits of the Great Lake adult salmonids have been reported for numerous past years (Dryer et al., 1965; Harney and Norden, 1972; Wismer, 1983; Brandt, 1986b; Christie et al., 1987; Jude et al., 1987; Olson et al., 1988; Diana, 1990). We concluded from these data that adult salmonids from Lake Ontario feed primarily on alewife and smelt. Olson et al. (1988) presented dietary information on lake trout, brown trout, and chinook salmon for the summers of 1981 and 1982 taken from the south-central portion of Lake Ontario. However, Jude et al. (1987) reported diet data on Lake Michigan adult salmonids from 1973 to 1982 for all seasons, and thus, we choose to apply the results from this study to the food web model. Analyses of the information presented in Jude et al. (1987) lead us to the estimated diets presented in Table 5a–e. Conversion of weight proportions to energy values were facilitated through application of estimated energy values for the selected dietary components (see Table 2).

Studies on the diets of juvenile salmonids from the Great Lakes (Harney and Norden, 1972; Elrod, 1983; Jude et al., 1987; Olson et al., 1988; Diana, 1990; Elrod and O'Gorman, 1991) lead us to conclude that the majority of juvenile salmonids prey upon benthic invertebrates, small alewife, and rainbow smelt. We chose to base our estimated juveniles diets (with the exception of juvenile lake trout) on the data presented in Jude et al. (1987) because it studied stomach contents from 1973 to 1982 for all seasons.

Biomass

To estimate the total biomass of salmon and trout in Lake Ontario, the total biomass of the prey species (i.e. alewife, rainbow smelt, and slimy sculpin) was utilized. We assumed that ten percent of this total, 1.02 $g \cdot m^{-2}$, was the total biomass of the top predators.

Due to lack of published data on the relative proportion of each species, an estimation was necessary. Although probably not very realistic, the assumed top predator biomass was divided equally into the five species of trout and salmon. We also assumed that each compartment consisted of 10% juveniles and 90% adults by weight. Thus, all top predator compartments were estimated to consist of 0.184 $g \cdot m^{-2}$ of adults and 0.0204 $g \cdot m^{-2}$ of juveniles.

3.11. Lake trout

Biomass

The standing stock of adult lake trout in Lake Ontario was assumed to be 0.184 $g \cdot m^{-2}$ (see

above calculations). With an average weight of 500 g (dry) (Borgmann, 1985), we calculated an average energy content of 10 646 $J \cdot g^{-1}$ (Stewart et al., 1983). These assumptions resulted in an estimated standing stock of 1950 $J \cdot m^{-2}$.

The standing stock of juvenile lake trout was assumed to be 0.0204 $g \cdot m^{-2}$. We calculated an average energy content of 6502 $J \cdot g^{-1}$ (Stewart et al., 1983), by assuming the average weight of the organism was 260 g (wet) (Stewart et al., 1983). These assumptions resulted in juvenile standing stock of 133 $J \cdot m^{-2}$.

Production

Stewart and Ibarra (1991) reported an annual production–biomass ratio of 0.6 for lake trout in Lake Michigan. Applying this ratio to the estimated biomass, we calculated that the daily production by the adult and juvenile lake trout were 3.21 and 0.218 $J \cdot m^{-2}$, respectively.

Respiration / SDA

Using a bioenergetic model for lake trout from Lake Michigan (Stewart et al., 1983), we computed that the adult lake trout would consume 9.23×10^{-4} g $O_2 \cdot g^{-1} \cdot d^{-1}$, at its preferred temperature of 10.1°C (Olson et al., 1988). We converted this value to 1.70 g $O^2 \cdot m^{-2} \cdot d^{-1}$, and assuming an oxycaloric value of 13 560 $J \cdot g^{-1}$ O_2 (Elliott and Davison, 1975), further calculations resulted in an energy consumption rate of 2.30 $J \cdot m^{-2} \cdot d^{-1}$ for respiratory processes by adult lake trout.

Using the same model (Stewart et al., 1983) and assumptions we computed that the juvenile lake trout would consume 1.68×10^{-3} g $O_2 \cdot g^{-1} \cdot d^{-1}$. We converted this value to 3.43×10^{-5} $g \cdot m^{-2} \cdot d^{-1}$, or 0.465 $J \cdot m^{-2} \cdot d^{-1}$.

Manipulation of the bioenergetic equations (Stewart et al., 1983) yielded the observation that the energy lost to the process of food metabolism was equal to 14.1% of the total energy consumption for both adults and juveniles.

Excretion / egestion

The bioenergetic model for lake trout suggested that the egestion and excretion rates for both adults and juveniles were 18.2% and 7.3% of consumption, respectively (Stewart et al., 1983). We adopted these parameters for the lake trout from Lake Ontario.

Table 5
Calculated diets for (a) lake trout, (b) coho salmon, (c) chinook salmon, (d) brown trout and (e) rainbow trout from Lake Ontario in terms of both weight and energy

Dietary item	Portion by weight		Portion by energy	
	adult	juvenile	adult	juvenile
(a) *Lake trout*				
alewife	0.90	0.20	0.89	0.20
sculpin	0.00	0.55	0.00	0.52
smelt	0.10	0.25	0.11	0.28
benthos	0.00	0.00	0.00	0.00
(b) *Coho salmon*				
alewife	0.90	0.20	0.89	0.25
sculpin	0.00	0.30	0.00	0.37
smelt	0.10	0.00	0.11	0.00
benthos	0.00	0.50	0.00	0.38
(c) *Chinook salmon*				
alewife	0.90	0.65	0.89	0.70
sculpin	0.00	0.20	0.00	0.21
smelt	0.10	0.00	0.11	0.00
benthos	0.00	0.15	0.00	0.09
(d) *Brown trout*				
alewife	0.85	0.40	0.84	0.43
sculpin	0.05	0.20	0.05	0.21
smelt	0.10	0.20	0.11	0.23
benthos	0.00	0.20	0.00	0.13
(e) *Rainbow trout*				
alewife	0.85	0.35	0.85	0.33
sculpin	0.02	0.00	0.02	0.00
smelt	0.10	0.65	0.11	0.67
benthos	0.03	0.00	0.02	0.00

Percent by weight of dietary items for adult calculated using data from Jude et al., 1987.
Percent by energy of dietary items calculated by the application of assumed energy content for dietary items to the estimated percent by weight (see Table 2).

Consumption

Using Eq. 1 we calculated that the adult lake trout in Lake Ontario consumed 9.12 $J \cdot m^{-2} \cdot d^{-1}$. Applying the diet composition we assumed for adult lake trout (Table 5a) we calculated that the adult lake trout utilize approximately 1.00

$J \cdot m^{-2} \cdot d^{-1}$ of rainbow smelt, and 8.12 $J \cdot m^{-2} \cdot d^{-1}$ of alewife.

Using Eq. 1 we calculated that the juvenile lake trout in Lake Ontario consumes approximately 1.13 $J \cdot m^{-2} \cdot d^{-1}$. Application of the assumed diet for juvenile lake trout (Table 5a), we calculated that it exploited approximately 0.316 $J \cdot m^{-2} \cdot d^{-1}$ of rainbow smelt, 0.588 $J \cdot m^{-2} \cdot d^{-1}$ of slimy sculpin, and 0.226 $J \cdot m^{-2} \cdot d^{-1}$ of alewife.

Summary

We estimated that the total lake trout population was 2080 $J \cdot m^{-2}$, while the production rate was about 3.43 $J \cdot m^{-2} \cdot d^{-1}$. Stocking added 0.0608 $J \cdot m^{-2} \cdot d^{-1}$, while harvest removed 0.351 $J \cdot m^{-2} \cdot d^{-1}$. Respiration and SDA energy totalled 4.21 $J \cdot m^{-2} \cdot d^{-1}$ for the lake trout population, while daily excretion and egestion losses amounted to 2.61 $J \cdot m^{-2}$. Daily nutritional requirements for both juvenile and adult lake trout were met by the consumption of 1.32 $J \cdot m^{-2}$ of rainbow smelt, 0.588 $J \cdot m^{-2}$ of slimy sculpin, and 8.35 $J \cdot m^{-2}$ of alewife.

3.12. Coho salmon

Biomass

The standing stock of adult coho salmon in Lake Ontario was assumed to be 0.184 $g \cdot m^{-2}$. Assuming that the average weight of an adult coho salmon from Lake Ontario was 250 g (dry) (Borgmann, 1985), and the dry weight was 25% the wet weight, we calculated an average energy content of 6750 $J \cdot g^{-1}$ using a relationship reported by Stewart and Ibarra (1991). This produced an estimated standing stock energy of 1240 $J \cdot m^{-2}$.

The standing stock of juvenile coho salmon was about 0.0204 $g \cdot m^{-2}$. The average weight of juvenile coho salmon from Lake Ontario was not found in the published literature. We approximated the weight as 160 g (wet), using an age–weight relationship (Niimi, 1981). Applying this estimated body weight to a relationship between energy value and body size, we calculated that the average energy content was 5922 $J \cdot g^{-1}$ (Stewart and Ibarra, 1991). Application of this energy value to the standing stock resulted in an estimated standing stock energy of 121 $J \cdot m^{-2}$.

Production

Stewart and Ibarra (1991) reported an annual production–biomass ratio of 1.15 for coho salmon in Lake Michigan. Applying this ratio to the estimated biomass, we calculated that the daily production was approximately 3.91 $J \cdot m^{-2} \cdot d^{-1}$ by adult and 0.381 $J \cdot m^{-2} \cdot d^{-1}$ by the juvenile coho salmon.

Respiration / SDA

Using a bioenergetics model (Hewett and Johnson, 1987), we calculated that the adult coho salmon would consume 1.41×10^{-3} g $O_2 \cdot g^{-1} \cdot d^{-1}$. This calculation was computed at a preferred temperature of 12°C (Stewart and Ibarra, 1991). We converted the rate of oxygen consumption to 2.60×10^{-4} g $O_2 \cdot m^{-2} \cdot d^{-1}$, and assuming an oxycaloric value of 13560 $J \cdot g^{-1}$ O_2 (Elliott and Davison, 1975), we estimated an energy consumption rate of 3.52 $J \cdot m^{-2} \cdot d^{-1}$ for respiratory processes.

Using the same assumptions and bioenergetic model (Hewett and Johnson, 1987), we calculated that the juvenile coho salmon would consume 2.08×10^{-3} g $O_2 \cdot g^{-1} \cdot d^{-1}$. We converted the rate of oxygen consumption to 4.24×10^{-5} g $O_2 \cdot m^{-2} \cdot d^{-1}$, or 0.575 $J \cdot m^{-2} \cdot d^{-1}$.

We estimated the energy used for the process of food metabolism through manipulation of the bioenergetics equations (Hewett and Johnson, 1987). We calculated this process required 14.2% of the total energy consumption for adults, and 13.7% for juvenile coho salmon.

Excretion / egestion

The bioenergetics model for coho salmon (Hewett and Johnson, 1987) suggested that the egestion and excretion rates for adults were 17.2% and 8.2% of consumption, respectively. Similarly, manipulation of the equations also suggested that the egestion and excretion rates of juvenile coho salmon were 20.1% and 7.9% of consumption, respectively. We adopted these values for the coho salmon from Lake Ontario.

Consumption

Using Eq. 1 we calculated that the adult coho salmon in Lake Ontario required 12.3 $J \cdot m^{-2} \cdot d^{-1}$. Applying the diet of adult coho salmon (see Table 5b), we computed that the adult coho salmon in Lake Ontario utilized approximately 1.35 $J \cdot m^{-2} \cdot d^{-1}$ of rainbow smelt, and 10.9 $J \cdot m^{-2} \cdot d^{-1}$ of alewife.

By application of Eq. 1 we calculated that the juvenile coho salmon in Lake Ontario consumed 1.64 $J \cdot m^{-2} \cdot d^{-1}$. Assuming the diet of juvenile coho salmon (Table 5b), we figured that the juvenile coho salmon exploited approximately 0.623 $J \cdot m^{-2} \cdot d^{-1}$ of benthic invertebrates, 0.607 $J \cdot m^{-2} \cdot d^{-1}$ of slimy sculpin, and 0.410 $J \cdot m^{-2} \cdot d^{-1}$ of alewife.

Summary

The total coho salmon population was about 1360 $J \cdot m^{-2}$, while the daily production rate was approximated at 4.29 $J \cdot m^{-2}$. Stocking added 0.00898 $J \cdot m^{-2}$ to the lake per day, while harvest removed 0.159 $J \cdot m^{-2}$. Respiration and SDA energy totalled 6.07 $J \cdot m^{-2} \cdot d^{-1}$ for the coho salmon population, while daily excretion and egestion losses amounted to 3.58 $J \cdot m^{-2} \cdot d^{-1}$. Daily nutritional requirements for both juvenile and adult coho salmon were met by the consumption of 0.623 $J \cdot m^{-2} \cdot d^{-1}$ benthic organisms, 0.607 $J \cdot m^{-2} \cdot d^{-1}$ slimy sculpin, 1.35 $J \cdot m^{-2} \cdot d^{-1}$ rainbow smelt, and 11.3 $J \cdot m^{-2} \cdot d^{-1}$ alewife.

3.13. Chinook salmon

Biomass

Due to the absence of a published estimated average weight for adult chinook salmon from Lake Ontario, we assumed that the average weight was approximately 4000 g (wet). The standing stock of the adult chinook salmon in Lake Ontario was about 0.1836 $g \cdot m^{-2}$. We calculated the average energy content was 9710 $J \cdot g^{-1}$, using a relationship reported by Stewart and Ibarra (1991), thus producing an estimated standing stock of 1780 $J \cdot m^{-2}$.

The standing stock of juvenile chinook salmon in Lake Ontario was about 0.0204 $g \cdot m^{-2}$. The average weight of juvenile chinook salmon from Lake Ontario was not found in the literature, and we assumed it to be roughly 600 g (wet). Application of this estimated body weight, to a relationship between energy value and body size (Stewart and Ibarra, 1991), resulted in a calculated average energy content of 6360 $J \cdot g^{-1}$. Using this estimated energy value in association with the standing stock value yielded a standing stock energy of approximately 130 $J \cdot m^{-2}$.

Production

Stewart and Ibarra (1991) reported an annual production–biomass ratio of 1.6 for chinook salmon in Lake Michigan. Applying this ratio to the estimated biomass, we calculated that the production was approximately 7.81 $J \cdot m^{-2} \cdot d^{-1}$ by adult and 0.569 $J \cdot m^{-2} \cdot d^{-1}$ by the juvenile chinook salmon.

Respiration / SDA

Using a bioenergetics model (Hewett and Johnson, 1987), we calculated the adult chinook salmon would consume 9.89×10^{-4} g $O_2 \cdot g^{-1} \cdot d^{-1}$, at a preferred temperature of 11°C (Stewart and Ibarra, 1991). Using the biomass computed above, we found a rate total of 1.82×10^{-4} g $O_2 \cdot m^{-2} \cdot d^{-1}$, and assuming an oxycaloric value of 13560 $J \cdot g^{-1}$ O_2 (Elliott and Davison, 1975), we computed an energy consumption rate of 2.46 $J \cdot m^{-2} \cdot d^{-1}$ by adults for respiratory processes.

Similarly, we calculated that the juvenile chinook salmon would consume 2.37×10^{-3} g $O_2 \cdot g^{-1} \cdot d^{-1}$, at a preferred temperature of 18°C (Stewart and Ibarra, 1991). We converted this value to 4.84×10^{-5} g $O_2 \cdot m^{-2} \cdot d^{-1}$, or 0.656 $J \cdot m^{-2} \cdot d^{-1}$.

We computed the energy used for the process of food metabolism through manipulation of the bioenergetic equations (Hewett and Johnson, 1987). We found that this process required 14.2% of the total energy consumption for adults and 14.5% for juveniles.

Excretion / egestion

The bioenergetic model (Hewett and Johnson, 1987) for adult chinook salmon suggests that the egestion and excretion rates were 17.7% and 7.7% of consumption, respectively. We used these pa-

rameters for adult chinook salmon in Lake Ontario.

Similarly, we adopted the respective values of 16.0% and 10.5% for the egestion and excretion rates by juvenile chinook salmon.

Consumption

Using Eq. 1 we computed that adult chinook salmon in Lake Ontario consumed 17.0 $J \cdot m^{-2} \cdot d^{-1}$. Application of the assumed diet (Table 5c), we computed that the adult chinook salmon in Lake Ontario would utilize approximately 1.87 $J \cdot m^{-2} \cdot d^{-1}$ of rainbow smelt, and 15.1 $J \cdot m^{-2} \cdot d^{-1}$ of alewife.

Similarly, we calculated that the juvenile chinook salmon in Lake Ontario consumed 2.07 $J \cdot m^{-2} \cdot d^{-1}$; 0.186 $J \cdot m^{-2} \cdot d^{-1}$ of benthic organisms, 0.435 $J \cdot m^{-2} \cdot d^{-1}$ of slimy sculpin, and 1.45 $J \cdot m^{-2} \cdot d^{-1}$ of alewife.

Summary

We evaluated that the total chinook salmon population was 1910 $J \cdot m^{-2}$, while the daily production rate was approximated at 8.38 $J \cdot m^{-2}$. Stocking of chinook salmon added 0.0132 $J \cdot m^{-2} \cdot d^{-1}$ to the lake, while harvest removed 3.01 $J \cdot m^{-2} \cdot d^{-1}$. Respiration and SDA energy totalled 5.83 $J \cdot m^{-2} \cdot d^{-1}$ for the chinook salmon population, while daily excretion and egestion losses amounted to 4.86 $J \cdot m^{-2}$. Daily nutritional requirements for both juvenile and adult chinook salmon were met by the consumption of 0.186 $J \cdot m^{-2}$ benthic organisms, 0.435 $J \cdot m^{-2}$ slimy sculpin, 1.87 $J \cdot m^{-2}$ rainbow smelt, and 16.6 $J \cdot m^{-2}$ alewife.

3.14. Brown trout

The energetics of brown trout was based on a model which was different from the models utilized for the other salmonids in Lake Ontario. This model (Elliott, 1976) required the calculation of maximum consumption first, while the population production was determined from the estimation of all other parameters in the bioenergetics equation (i.e. Eq. 1).

Respiration / SDA

The adult brown trout population in Lake Ontario was assumed to be 0.1836 $g \cdot m^{-2}$. Assuming an average weight of 2000 g (wet), a preferred temperature of 13.4°C (Olson et al., 1988) and using the bioenergetic equation (from Elliott, 1976), we calculated that the adult brown trout would respire 10.4 $cal \cdot g^{-1} \cdot d^{-1}$, or 8.01 $J \cdot m^{-2} \cdot d^{-1}$.

The juvenile brown trout population was assumed to be about 0.0204 $g \cdot m^{-2}$. Assuming an average weight of 260 g (wet) and, using the same assumptions employed in the calculation for adult brown trout, the juvenile brown trout would respire 16.7 $cal \cdot g^{-1} \cdot d^{-1}$, or 1.42 $J \cdot m^{-2} \cdot d^{-1}$. It should be noted that both these values for respiration encompassed all metabolic energy, including SDA.

Consumption

Through application of the assumed temperature preference and body weight to the consumption equation (Elliott, 1976), we computed that the adult brown trout would consume 24.3 $cal \cdot g^{-1} \cdot d^{-1}$, or 18.7 $J \cdot m^{-2} \cdot d^{-1}$. Applying the adult brown trout diet (Table 5d), we calculated that the adult brown trout utilized approximately 0.935 $J \cdot m^{-2} \cdot d^{-1}$ of slimy sculpin, 2.06 $J \cdot m^{-2} \cdot d^{-1}$ of rainbow smelt, and 15.7 $J \cdot m^{-2} \cdot d^{-1}$ of alewife.

Similarly, we computed that the juvenile brown trout would consume 3.35 $J \cdot m^{-2} \cdot d^{-1}$; 0.436 $J \cdot m^{-2} \cdot d^{-1}$ of benthic organisms, 0.704 $J \cdot m^{-2} \cdot d^{-1}$ of slimy sculpin, 0.771 $J \cdot m^{-2} \cdot d^{-1}$ of rainbow smelt, and 1.44 $J \cdot m^{-2} \cdot d^{-1}$ of alewife.

Excretion / egestion

Manipulation of the equations presented in the bioenergetic model (Elliott, 1976) resulted in a total egestion and excretion rate of 31.0% of consumption, respectively. We adopted this rate for both adult and juvenile brown trout from Lake Ontario.

Production

Using Eq. 1 we calculated that the adult and juvenile brown trout in Lake Ontario produced 4.89 and 0.890 $J \cdot m^{-2} \cdot d^{-1}$, respectively.

Biomass

The adult brown trout population in Lake Ontario was assumed to be about 0.1836 $g \cdot m^{-2}$. Data regarding the energy content of brown trout was not located during the literature search. Thus, we estimated the energy content of both adult and juvenile to be approximately 7000 $J \cdot g^{-1}$. Through application of this assumption we computed the standing stock energy of adult brown trout was 1290 $J \cdot m^{-2}$.

Likewise, we calculated the estimated juvenile brown trout standing stock of 0.0204 $g \cdot m^{-2}$ to be approximately 143 $J \cdot m^{-2}$.

Summary

The total brown trout population was about 1430 $J \cdot m^{-2}$. The daily production rate was approximated at 5.78 $J \cdot m^{-2}$. We found that stocking added 0.0414 $J \cdot m^{-2} \cdot d^{-1}$, while harvest removed 0.267 $J \cdot m^{-2} \cdot d^{-1}$. Respiration (including SDA) totalled 9.43 $J \cdot m^{-2} \cdot d^{-1}$ for the brown trout population, while daily excretion and egestion losses amounted to 6.84 $J \cdot m^{-2}$. Daily nutritional requirements were met by the consumption of 0.436 $J \cdot m^{-2}$ benthic organisms, 1.64 $J \cdot m^{-2}$ slimy sculpin, 2.83 $J \cdot m^{-2}$ rainbow smelt, and 17.1 $J \cdot m^{-2}$ alewife.

3.15. Rainbow trout

No published literature on the bioenergetics of rainbow trout in the Great Lakes was found, thus we employed a model (Stewart et al., 1983) to determine the estimates required to complete the food web model for Lake Ontario. Obviously, the model for lake trout or brown trout had to be chosen. Initially we ran both models and the results showed very little difference between the two. The final choice was the lake trout model (Stewart et al., 1983) since this model takes into account the diet components, while the brown trout model does not.

Biomass

The standing stock of adult rainbow trout was assumed to be about 0.1836 $g \cdot m^{-2}$. Assuming the average weight of the organism was 1000 g (wet), we calculated that the average energy content to be 8780 $J \cdot g^{-1}$ (Stewart et al., 1983). These assumptions enabled us to calculate a standing stock estimation of 1610 $J \cdot m^{-2}$.

The standing stock of juvenile rainbow trout in Lake Ontario was assumed to be 0.0204 $g \cdot m^{-2}$. We calculated an average energy content of 6190 $J \cdot g^{-1}$ (Stewart et al., 1983), assuming an average weight of 160 g (wet). These assumptions resulted in an estimated standing stock of 126 $J \cdot m^{-2}$.

Production

No published data on the production of rainbow trout in Lake Ontario was found. Keeping with the decision to model this species after lake trout, it was assumed that the production rate was the same as that reported for lake trout. Stewart and Ibarra (1991) reported an annual production–biomass ratio of 0.6 for lake trout in Lake Michigan. We applied this rate to the estimated biomass and calculated that the adult and juvenile trout produced approximately 2.65 and 0.208 $J \cdot m^{-2} \cdot d^{-1}$, respectively.

Respiration / SDA

Using the bioenergetic model for lake trout from Lake Michigan (Stewart et al., 1983), we estimated that the adult rainbow trout would consume 3.37×10^{-3} g $O_2 \cdot g^{-1} \cdot d^{-1}$, at a preferred temperature of 16.5°C (Coutant, 1977). We converted the rate of oxygen consumption to 6.19 $\times 10^{-4}$ g $O_2 \cdot m^{-2} \cdot d^{-1}$, and assuming an oxycaloric value of 13560 $J \cdot g^{-1}$ O_2 (Elliott and Davison, 1975), we estimated an energy consumption of 8.40 $J \cdot m^{-2} \cdot d^{-1}$ for respiratory processes.

Similarly, we computed that the juvenile rainbow trout would consume 5.43×10^{-3} g $O_2 \cdot g^{-1} \cdot d^{-1}$. We converted this rate of oxygen consumption to 1.11×10^{-4} g $O_2 \cdot m^{-2} \cdot d^{-1}$, or an energy consumption of 1.50 $J \cdot m^{-2} \cdot d^{-1}$ by juvenile rainbow trout.

Energy used for the process of food metabolism was modelled separately from the respiration (Stewart et al., 1983). Manipulation of the equations presented in the report yielded the observation that the energy lost to this process equalled 14.5% of the total energy consumption for both adults and juveniles.

Excretion / egestion

The bioenergetic model for lake trout suggested that the egestion and excretion rates totalled 25.7% and 25.5% of consumption by the adult and juvenile populations, respectively. We adopted these parameters for rainbow trout from Lake Ontario.

Consumption

Using Eq. 1 we calculated that the adult rainbow trout in Lake Ontario would consume 18.5 $J \cdot m^{-2} \cdot d^{-1}$. Application of the assumed diet (Table 5e) suggested that this energy consumption was obtained from 0.370 $J \cdot m^{-2} \cdot d^{-1}$ of benthic organisms, 0.370 $J \cdot m^{-2} \cdot d^{-1}$ of slimy sculpin, 2.04 $J \cdot m^{-2} \cdot d^{-1}$ of rainbow smelt, and 15.7 $J \cdot m^{-2} \cdot d^{-1}$ of alewife.

Similarly, we computed that the juvenile rainbow trout would consume 2.85 $J \cdot m^{-2} \cdot d^{-1}$; 1.91 $J \cdot m^{-2} \cdot d^{-1}$ of rainbow smelt, and 0.941 $J \cdot m^{-2} \cdot d^{-1}$ of alewife.

Summary

The total rainbow trout population was estimated to be 1740 $J \cdot m^{-2}$, while the daily production rate was 2.86 $J \cdot m^{-2}$. Stocking added 0.0125 $J \cdot m^{-2} \cdot d^{-1}$ to the lake, while harvest removed 0.633 $J \cdot m^{-2} \cdot d^{-1}$. Respiration and SDA energy totalled 13.0 $J \cdot m^{-2} \cdot d^{-1}$ for the rainbow trout population, while daily excretion and egestion losses amounted to 5.48 $J \cdot m^{-2}$. Daily nutritional requirements for both juvenile and adult rainbow trout were met by the consumption of 0.370 $J \cdot m^{-2}$ of benthic organisms, 0.370 $J \cdot m^{-2}$ of slimy sculpin, 3.95 $J \cdot m^{-2}$ of rainbow smelt, and 16.6 $J \cdot m^{-2}$ of alewife.

4. The model

The food web of Lake Ontario just assembled (Fig. 3) contains more information than the traditional "Who eats whom?" ensemble of boxes and arrows. Each arrow, or exchange, has been quantified, and these weightings make the ensuing network highly useful as a vehicle with which to probe the functioning of the various system elements.

4.1. The NETWRK package

One widely-used tool with which to analyze quantified ecosystem flow networks is the software package NETWRK (Ulanowicz and Kay, 1991). NETWRK consists of four sections: The first set of routines estimates the magnitudes of both direct and indirect exchanges between any pair of system elements. For example, one might be interested to know how much of what leaves a particular taxon eventually makes its way into any other given compartment. Such "contributory" fractions are especially helpful in assessing the overall trophic efficiency of a foodweb.

4.2. Simulation results

In the analysis of the Lake Ontario food web we investigated how much phytoplankton primary production is eventually incorporated into a given top predator and we found that of every 1000 J of phytoplankton primary production, 3.4 J finally reaches the chinook salmon via various trophic pathways. Presently, we shall see that chinook salmon feed, for the most part, at the fourth trophic level. That means that the efficiency of the Lake Ontario ecosystem in turning primary production into chinook biomass is roughly three times greater than what would be predicted using the classical 10% rule, by which losses at each trophic level are reckoned at 90%. The brown trout and the coho salmon almost achieve the 10% efficiency (0.90 and 0.87 J, respectively), but the lake and rainbow trout fall short (0.66 and 0.50 J produced).

NETWRK has also been used to assess the fates of the two dominant inputs to the Lake Ontario ecosystem. Autochthonous energy enters the food chain as primary production by phytoplankton in the amount 8.5×10^{14} J/yr, almost twice the amount of allochthonous energy that flows into the system (4.63×10^{14} J/yr). Over 96% of the energy in primary production leaves the system via only three sinks. The largest fraction (43.6%) exits as detrital allochthonous energy. The two other major sinks are the respirations by alewives (35.3%) and by zooplankton (17.4%). The fate of imported allochthonous en-

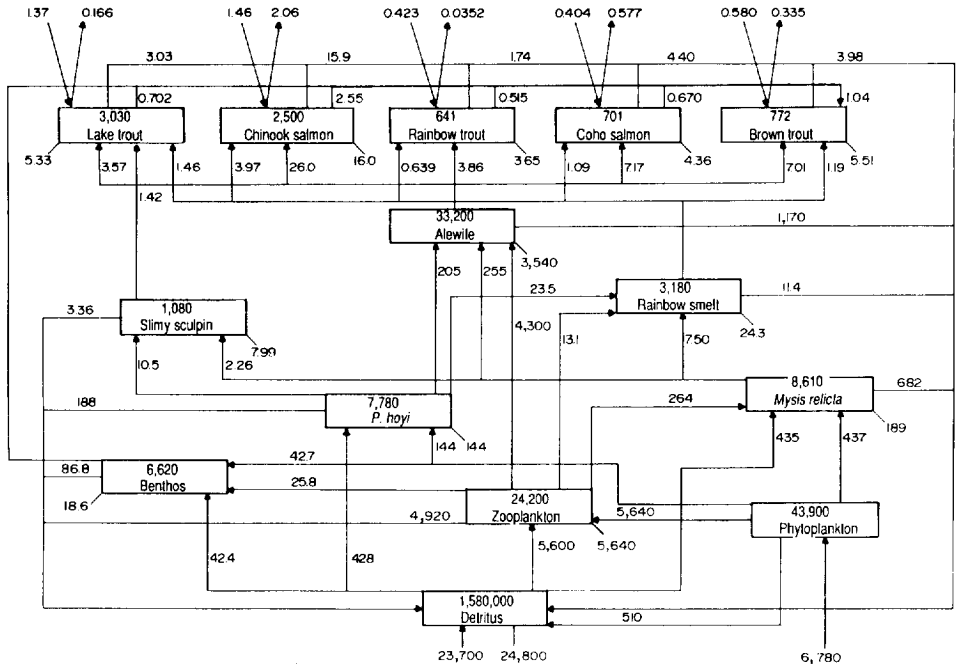

Fig. 4. The Lake Ontario food web balanced using AUTOMOD.

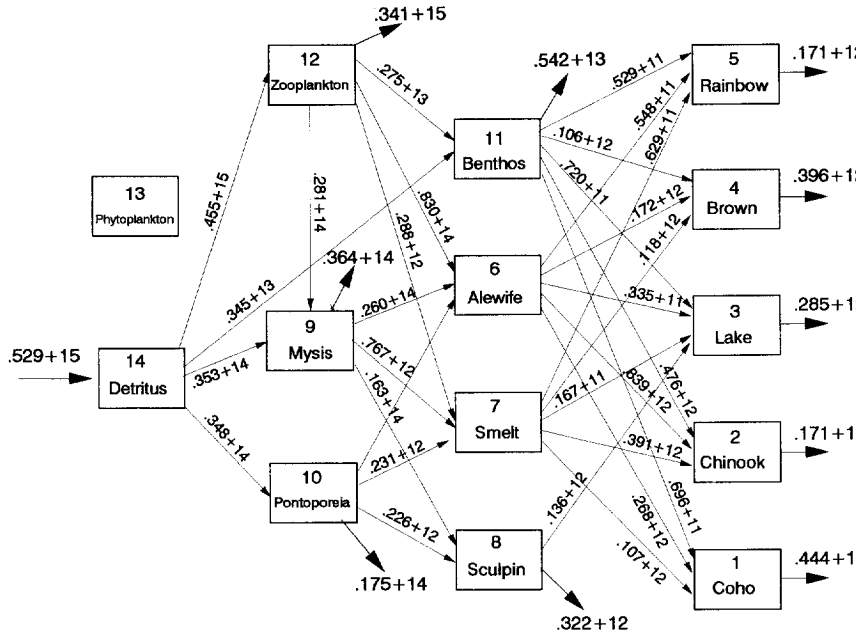

Fig. 5. Mapping the web into a straight chain of composite trophic levels and accompanying recycles.

ergy is quite similar. Almost 75% of material that enters the system as detritus leaves in the same form. About 15.6% is respired by alewives and another 7.4% by zooplankton. Very quickly, we see the grazing chain phytoplankton/detritus zooplankton alewife emerge as the "backbone" of the ecosystem.

4.3. Throphic structure of the network

Using similar matrix algebra techniques as were used to calculate indirect bilateral relationships, one may also elaborate the trophic structure of the network. This can be done in either of two ways: (1) The various trophic pathways leading to each taxon can be weighted and averaged to arrive at an estimate of the average trophic position (usually a non-integer value) at which that compartment feeds (Levine, 1980). (2) Alternatively, one may calculate the fraction of a taxon's activity that reaches it over all pathways of a given number of discrete steps and then assign that fraction to the corresponding level in a sequential chain of transfers. That is, one may essentially map the web of trophic interactions into a linear chain of composite trophic levels (Ulanowicz and Kemp, 1979; Higashi et al., 1989; Ulanowicz, in press).

Regarding Fig. 3, it is no surprise that both sets of calculations reveal essentially only four trophic levels in the Lake Ontario ecosystem. The "average trophic positions" of the five top carnivores, as determined by the first method, are all slightly less than 4.0. The alewife, smelt and sculpin all weigh in near 3.0, and the zooplankton and *Pontoporeia* near 2.0. Only the benthos and *Mysis* exhibit any significant degree of mixed-level feeding, having averaged values near 2.25.

The result of mapping the web in Fig. 4 into a straight chain of composite trophic levels and accompanying recycles are depicted in Fig. 5. A fifth trophic level appears in the figure to accommodate several feeding pathways with five steps (for example, phytoplankton, zooplankton, *Mysis*, rainbow, smelt, chinook, salmon); however, the amounts flowing over these longest pathways are quite small in comparison to overall trophic activity. In fact, there is a sharp drop-off in trophic efficiencies at level III, presumably due to the dominant role of respiration by alewives as a sink for material out of the system.

One can also use Fig. 5 to compare the relative rates of herbivory vs. detritivory for the system as a whole. The former is represented by the arrow from I to II in the amount 7.92×10^{14} J/yr, whereas the latter flows from the detrital compartment, D, to II at the rate of 5.29×10^{14} J/yr. That is, herbivorous grazing exceeds detritivory by about 50%. This ratio ranks Lake Ontario as a system heavily dominated by the grazing chain. In the Chesapeake ecosystem detritivory was greater than herbivory by almost a full order of magnitude (Baird and Ulanowicz, 1989). Even in the hydrographically similar Baltic Sea, detritivory exceeded herbivory by 47% (Ulanowicz and Wulff, 1991).

4.4. Recycling

The third analysis performed by NETWRK is the elaboration of recycling activity according to Ulanowicz (1983). In all, a total of 70 distinct, simple pathways exist in Fig. 3 whereby material leaves a compartment and returns there without passing through any other compartment more than once. Most of these pathways involve the 5 top predators; however, the cycles of greatest intensities are found among the lower trophic elements.

About 23% of total trophic activity (Finn, 1976) in Lake Ontario involves the recycle of biomass, almost identical to what occurs in the Baltic and somewhat less than the 29.7% that transpires in the Chesapeake (Ulanowicz and Wulff, 1991). Ulanowicz (1984) has suggested that a high Finn index of recycle could be symptomatic of the stress imposed on an ecosystem. That the Chesapeake should be more stressed than either the Baltic Sea or Lake Ontario, and that the latter two should be comparably impacted agrees well with our intuitive ranking of these three systems. This interpretation however is not supported by Christensen and Pauly (1993) who stated that the higher the Finn index the higher the system overhead (i.e. ecosystem stability sensu Rutledge et al., 1976).

All seventy cycles can be superimposed upon one another to reveal the overall picture of recycle activity in Lake Ontario (Fig. 6). It is interesting that this composite nexus is dominated by the pathway detritus zooplankton alewife chinook salmon, which, save for the first element is identical to the phytoplankton zooplankton alewife chinook salmon route that forms the backbone of the residual (acyclic) flows. This overlap underscores the dominance of the grazing pathway, the relative unimportance of benthic interactions, and the keystone role that alewives play in the functioning of the Lake Ontario ecosystem.

4.5. Analysis of topological indices

The final set of figures generated by NETWRK pertains to the topological status of the trophic network as a whole. The indices are generated by applying information theory to the topology and flow magnitudes of the network. Their complete exegesis is not possible here and readers wishing further details are referred to Ulanowicz (1986) and Ulanowicz and Norden (1990).

One begins with a quantity called the development capacity, which is proportional to the familiar Shannon–Weaver index of diversity applied to the individual flows (instead of to the component biomasses, as is the usual practice in ecology). The diversity of flows in this network rendition of the Lake Ontario ecosystem is 3.64 bits, which is significantly higher than the same measure for the Chesapeake (2.94) or the Baltic (3.10) webs, which were cast at a comparable level of resolution. An intuitive meaning for the development capacity is that it is a measure of how complicated the topology is.

Of course, things can be complicated in either an ordered or a disorganized way. Ulanowicz and Norden (1990) show how the development capacity can be decomposed into five distinct components. The key component is called the ascendency, which may be thought of as a measure of how tightly constrained are the trophic linkages. The ascendency is also inversely related to what ecologists call the "trophic breadth" exhibited by a predator. All of which implies that a network where most components are trophic specialists would have a large ascendency component, and vice-versa. The development capacity of the Lake Ontario network consists 41.4% of ascendency, which is a lower fraction than was found in either the Chesapeake (49.5%) or the Baltic (55.6%).

Three other components of the development capacity are generated by the exogenous trans-

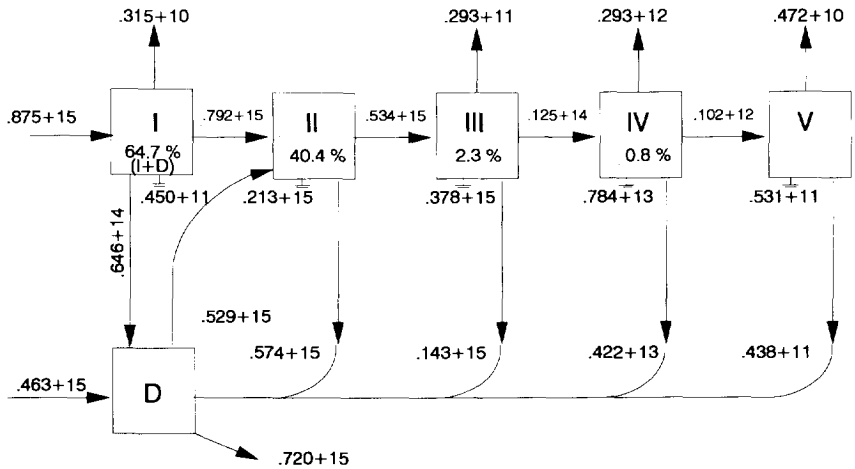

Fig. 6. All seventy cycles present in the food web are superimposed upon one another to reveal the overall picture of recycle activity in Lake Ontario.

fers, i.e., by the system inputs, exports and dissipations, respectively. The fractions of capacity encumbered by these flows will vary both in proportion to their relative magnitudes vis-a-vis overall activity and inversely to how "evenly" these flows are distributed among the compartments. That is, if inputs happen to be a large fraction of overall activity, this fact will contribute to a higher input component of the overall capacity. This component magnitude also would be abetted if total input were spread evenly among the compartments; however, it would be attenuated if the inputs entered only few of the compartments. (It would be identically zero if all inputs entered through only one compartment).

With this as background, we note that the input (9.8%) and export (3.0%) components of capacity in Lake Ontario are greater than their respective counterparts in the Chesapeake (2.6% inputs, 0.4% exports) or in the Baltic (0.9% inputs and 0% exports). Such difference appears due mostly to the greater relative dispersion of inputs and exports among the various components of the Lake Ontario ecosystem. The inequality reverses itself radically, however, when we look at dissipations, where the 8% figure for Lake Ontario is significantly less than the 19.4% and 21.4% fractions for the Chesapeake and the Baltic. As we remarked above, in Lake Ontario the preponderance of dissipations issues from only the alewife and zooplankton compartments, a situation that yields a low dissipation component for the lake ecosystem.

The final component of the capacity represents the multiplicity of pathways between two arbitrary system compartments whence the name "redundancy" given to this fraction. As one might expect, ascendency and redundancy are complementary components of the capacity. One expects, then, that the redundancy component in Lake Ontario (37.7%) should be larger than the corresponding proportions in either the Baltic (22%) or the Chesapeake (28.1%). The high redundancy in Ontario reflects the fact that omnivory is quite pronounced among most elements of that system. In comparison to the other two communities, the ecosystem of Lake Ontario resembles Isaacs (1972) model of an "unstructured" food web consisting mostly of opportunistic feeders.

5. Discussion

Fig. 3 shows all the information on the energy budget in Lake Ontario available as of the winter of 1992. We could not balance the food web in energy terms using the above information but this task was accomplished using the simulation program AUTOMOD. The problem of assembling literature data from different sources is that they are not integrated logically. Assumptions have been made and some data have been estimated. Ulanowicz (1989) suggested the use of a mathematical model to integrate food web data. For this purpose he developed a computer program, AUTOMOD, that integrates all available information and produces a simulation. AUTOMOD is "a generic simulation model for treating incomplete sets of data. This software provides the user with an objective tool for balancing a data set or for inferring the values of missing data (or for doing both simultaneously)." AUTOMOD has two options that work in a mass balanced way, one is linear donor controlled and one is predator controlled. With the available data for Lake Ontario, the predator-controlled model became unstable and some species, such as alewife went extinct. The results presented in Fig. 4 were obtained with the linear donor-controlled model.

This food web requires improvement is many areas since the data used to develop it has come from a variety of sources. The problem with using published literature is that data were collected in different years and seasons with a variety of techniques. Presently, co-ordinated research efforts between fish and plankton specialists are occurring (i.e. Lake Ontario Trophic Transfer Program) and this is expected to result in comparable data. Christensen and Pauly (1993) compared our lake Ontario food chain with 40 other food chains from other ecosystems. This analysis is very comprehensive and should be consulted to assess how this food chain compares with many others. The only consideration that needs to be added to their analysis is that the primary pro-

duction in Lake Ontario has considerably diminished since the 1970s due to phosphorus loadings reduction. Unfortunately, no published data on primary production are available for the 1980s and 1990s.

The food web representation could be improved if there were data on the bioenergetics of rainbow trout, slimy sculpin, and rainbow smelt. This effort is currently being undertaken by D. Stewart and his colleagues. Publication of their results will not only assist in the improvement of the Lake Ontario food web, but also aid other researchers which are involved in the ecology of these organisms.

Both *Mysis* and *P. hoyi* from Lake Ontario require more investigation; the relative importance of their dietary components needs to be determined as well as the respective egestion and excretion rates. This information could provide a good understanding of the importance of the role played by these two organisms in the Lake Ontario ecosystem.

The benthic compartment also needs to be studied more intensively with focus on the metabolic processes. At present, the only data available are for a selected few species. More information must be collected, either to provide general estimates for the benthos as a whole or to further subdivide the compartment into tubificids and chironomids. We believe that it is preferable to pursue the latter approach, rather than the former.

Similar difficulties arise for the zooplankton compartment. It is preferable to divide this compartment into cladocerans, copepods, and omnivorous zooplankton, however, the lack of data has prevented us from doing so.

Another consideration is the existence of zebra mussels in Lake Ontario. Zebra mussels are establishing themselves as a significant component of the ecosystem. Considering the proposed impact they will have on the resources of the lake, it will become necessary to incorporate them into the food web in the near future. This incorporation should occur as further understanding regarding the bioenergetics, feeding habits, and potential standing stock of this organism becomes available.

The significance of the role played by salmonids in the ecosystem is speculative due to the vast number of assumptions made regarding these organisms. It has become apparent that the standing stocks and production rates of salmonids from Lake Ontario must be investigated. If these types of studies have already been undertaken, it is essential that the data are made accessible through publication. Access to this type of information could improve the food web dramatically.

Acknowledgements

A number of individuals provided useful insights. In particular we thank Drs. U. Borgmann, M. Dickman, J. Elrod, O. Johannsson, K. Minns, D. Stewart, and T. Stewart.

References

Baird, D. and Ulanowicz, R.E., 1989. The seasonal dynamics of the Chesapeake Bay ecosystem. Ecol. Monogr., 59: 329–364.

Barber, M.C., Suarez, L.A. and Lassiter, R.R., 1991. Modelling bioaccumulation of organic pollutants in fish with an application to PCBs in Lake Ontario salmonids. Can. J. Fish. Aquat. Sci., 48: 318–337.

Bergstedt, R.A. and O'Gorman, R., 1989. Distribution of alewives in southeastern Lake Ontario in autumn and winter: a clue to winter mortalities. Trans. Am. Fish. Soc., 118: 687–692.

Borgmann, U., 1985. Predicting the effect of toxic substances on pelagic ecosystems. Sci. Total Environ., 44: 111–121.

Borgmann, U. and Whittle, D.M., 1983. Particle-size-conversion efficiency and contaminant concentrations in Lake Ontario biota. Can. J. Fish. Aquat. Sci., 40: 328–336.

Borgmann, U., Shear, H. and Moore, J., 1984. Zooplankton and potential fish production in Lake Ontario. Can. J. Fish. Aquat. Sci., 41: 1303–1309.

Bousfield, E.L., 1989. Revised morphological relationships within the amphipod genera *Pontoporeia* and *Grammaracanthus* and the "glacial relict" significance of their postglacial distributions. Can. J. Fish. Aquat. Sci., 46: 1714–1725.

Bowers, J.A. and Grossnickle, N.E., 1978. The herbivorous habits of *Mysis relicta* in Lake Michigan. Limnol. Oceanogr., 23: 767–776.

Brandt, S.B., 1980. Spatial segregation of adult and young-of-the-year alewives across a thermocline in Lake Michigan. Trans. Am. Fish. Soc., 109: 469–478.

Brandt, S.B., 1986a. Ontogenetic shifts in habitat, diet, and

diel-feeding periodicity of slimy sculpin in Lake Ontario. Trans. Am. Fish. Soc., 115: 711–715.

Brandt, S.B., 1986b. Food of trout and salmon in Lake Ontario. J. Great Lakes Res., 12: 200–205.

Brandt, S.B. and Madon, S.P., 1986. Rainbow smelt (*Osmerus modax*) predation on slimy sculpin (*Cottus cognatus*) in Lake Ontario. J. Great Lakes Res., 12: 332–325.

Brandt, S.B., Mason, D.M., Coates, T., MacNeill, D.B. and Gannon, J.E., 1987. Predation by alewives on larvae of yellow perch in Lake Ontario. Trans. Am. Fish. Soc., 116: 641–645.

Brinkhurst, R.O., 1970. Distribution and abundance of tubificid (oligochaeta) species in Toronto Harbour, Lake Ontario. J. Fish. Res. Board Can., 27: 1961–1969.

Brinkhurst, R.O. and Austin, M.J., 1979. Assimilation by aquatic oligochaeta. Int. Rev. Ges. Hydrobiol., 64: 245–250.

Brinkhurst, R.O., Chau, K.E. and Kaushik, N.K., 1972. Interspecific interactions and selective feeding by tubificid oligochaetes. Limnol. Oceanogr., 17: 122–133.

Carpenter, G.F., Mansey, E.L. and Watson, N.H.F., 1974. Abundance and life history of *Mysis relicta* in St. Lawrence Great Lakes. J. Fish. Res. Board Can., 31: 319–325.

Christensen, V. and Pauly, D.V., 1993. Flow characteristics of aquatic ecosystems. In: V. Christensen and D. Pauly (Editors), Trophic Models of Aquatic Ecosystems. International Center for Living Aquatic Resources, Manila, Philippines, pp. 338–352.

Christie, W.J., Scott, K.A., Sly, P.G. and Strus, R.H., 1987. Recent changes in the aquatic food web on eastern Lake Ontario. Can. J. Fish. Aquat. Sci., 44 (Suppl. 2): 37–52.

Cohen, J.E., 1991. Food webs as a focus for unifying ecological theory. Ecol. Int. Bull., 19: 1–13.

Cook, D.G. and Johnson, M.G., 1974. Benthic macroinvertebrates of the St. Lawrence Great Lakes. J. Fish. Res. Board Can., 31: 763–782.

Coutant, C.C., 1977. Compilation of temperature preference data. J. Fish. Res. Board Can., 34: 739–745.

Cummins, K.W. and Wuycheck, J.C., 1971. Caloric equivalents for investigations in ecological energetics. Mitt. Int. Ver. Limnol., 18: 1–158.

Dermott, R. and Corning, K., 1988. Seasonal ingestion rates of *Pontoporeia hoyi* (Amphipoda) in Lake Ontario. Can. J. Fish. Aquat. Sci., 45: 1886–1895.

Devol, A.H., 1979. Zooplankton respiration and its relation to plankton dynamics in two lakes of contrasting trophic state. Limnol. Oceanogr., 24: 893–905.

Diana, J.S., 1990. Food habits of angler-caught salmonines in western Lake Huron. J. Great Lakes Res., 16: 271–278.

Dryer, W.R., Erkkila, L.F. and Tetzloff, C.L., 1965. Food of lake trout in Lake Superior. Trans. Am. Fish. Soc., 94: 169–176.

Elliott, J.M., 1976. The energetics of feeding, metabolism and growth of brown trout (*Salmo trutta* L.) in relation to body weight, water temperature and ration size. J. Anim. Ecol., 45: 923–948.

Elliott, J.M. and Davison, W., 1975. Energy equivalents of oxygen consumption in animal energetics. Oecologia (Berl.), 19: 195–201.

Elrod, J.H., 1983. Seasonal food of juvenile lake trout in U.S. waters of Lake Ontario. J. Great Lakes Res., 9: 396–402.

Elrod, J.H. and O'Gorman, R., 1991. Diet of juvenile lake trout in southern Lake Ontario in relation to abundance and size of prey fishes, 1979–1987. Trans. Am. Fish. Soc., 120: 290–302.

Evans, M.S. and Landrum, P.F., 1989. Toxicokinetics of DDE, benzo(a)pyrene, and 2,4,5,2′,4′,5′-hexachlorobiphenyl in *Pontoporeia hoyi* and *Mysis relicta*. J. Great Lakes Res., 15: 589–600.

Finn, J.T., 1976. Measures of ecosystem structure and function derived from analysis of flows. J. Theor. Biol., 56: 363–380.

Flath, L.E. and Diana, J.S., 1985. Seasonal energy dynamics of the alewife in southeastern Lake Michigan. Trans. Am. Fish. Soc., 114: 328–337.

Flint, R.W., 1986. Hypothesized carbon flow through the deepwater Lake Ontario food web. J. Great Lake Res., 12: 344–354.

Gannon, J.E., 1976. The effects of differential digestion rates of zooplankton by alewife, *Alosa pseudoharengus*, on determination of selective feeding. Trans. Am. Fish. Soc., 105: 89–95.

Gardner, W.S., Nalepa, T.F., Frez, W.A., Cichocki, E.A. and Landrum, P.F., 1985. Seasonal patterns in lipid content of Lake Michigan macroinvertebrates. Can. J. Fish. Aquat. Sci., 42: 1827–1832.

Gray, I.M., 1987. Differences between nearshore and offshore phytoplankton communities in Lake Ontario. Can. J. Fish. Aquat. Sci., 44: 2155–2163.

Gray, J.E., 1979. Cold water community rehabilitation: (1) sea lamprey (2) alewife (3) smelt (4) sculpins (5) deepwater ciscoes. Lake Ontario Tactical Fisheries Plan Document No. 9, 21 pp.

Grossnickle, N.E., 1982. Feeding habits of *Mysis relicta* –an overview. Hydrobiologia, 93: 101–107.

Harney, M.A. and Norden, C.R., 1972. Food habits of the coho salmon, *Oncorhynchus kisutch*, in Lake Michigan. Proc. Wis. Acad. Sci. Arts Lett., 60: 79–85.

Hewett, S.W. and Johnson, B.L., 1987. A generalized bioenergetics model of fish growth for microcomputers. WIS-SG-87-245.

Hewett, S.W. and Stewart, D.J., 1989. Zooplanktivory by alewives in Lake Michigan: ontogenetic, seasonal, and historical patterns. Trans. Am. Fish. Soc., 118: 581–596.

Higashi, M., Burns, T.P. and Patten, B.C., 1989. Food network unfolding: An extension of trophic dynamics for application to natural ecosystem. J. Theor. Biol., 140: 243.

Hurley, D.A., 1986. Effect of nutrient reduction on the diets of four fish species in the Bay of Quinte, Lake Ontario. Can. Spec. Publ. Fish. Aquat. Sci., 86: 237–246.

Isaacs, J.D., 1972. Unstructured marine food webs and "pollutant analogues". Fish. Bull., 70: 1053–1059.

James, M.R., 1987. Respiration rates in the cladoceran *Cerio-*

daphnia dubia in Lake Rotongaio, a monomictic lake. J. Plankton Res., 9: 573–578.

Johannson, O.E. and O'Gorman, R., 1991. Roles of predation, food, and temperature in structuring the epilimnetic zooplankton populations in Lake Ontario, 1981–1986. Trans. Am. Fish. Soc., 120: 193–208.

Johannson, O.E., Dermott, R.M., Feldkamp, R. and Moore, J.E., 1985. Lake Ontario long term biological monitoring program: report for 1981 and 1982. Can. Tech. Rep. Fish. Aquat. Sci., No. 1414.

Johnson, M.G. and Brinkhurst, R.O., 1971. Production of benthic macroinvertebrates of Bay of Quinte and Lake Ontario. J. Fish. Res. Board Can., 28: 1699–1714.

Johnson, R.K., 1987. The life history, production and food habits of *Pontoporeia affinis* Lindstrom (Crustacea: Amphipoda) in mesotrophic Lake Erken. Hydrobiologia, 144: 277–283.

Jude, D.J., Tesar, F.J., Deboe, S.F. and Miller, T.J., 1987. Diet selection of major prey species by Lake Michigan salmonines, 1973–1982. Trans. Am. Fish. Soc., 116: 677–691.

Keilty, T.J., 1990. Evidence for alewife (*Alosa pseudoharengus*) predation on the European cladoceran *Bythotrephes cederstroemi* in northern Lake Michigan. J. Great Lakes Res., 16: 330–333.

Kemp, A.L.W. and Harper, N.S., 1976. Sedimentation rates and a sediment budget for Lake Ontario. J. Great Lakes Res., 2: 324–340.

Kerr, G. and LeTendre, G., 1991. The state of the Lake Ontario fish community in 1989. GLFC Spec. Rep. 91-3.

Kinney, W.L., 1972. The macrobenthos of Lake Ontario. Proc. 15th Conf. Great Lakes Res., 1972: 53–79.

Lasenby, D.C. and Langford, R.R., 1972. Growth, life history, and respiration of *Mysis relicta* in an artic and temperate lake. J. Fish. Res. Board Can., 29: 1701–1708.

Lasenby, D.C. and Langford, R.R., 1973. Feeding and assimilation of *Mysis relicta*. Limnol. Oceanogr., 18: 280–285.

Leidy, G.R. and Plsokey, G.R., 1980. Simulation modeling of zooplankton and benthos in reservoirs: documentation and development of model constructs. Environmental and Water Quality Operational Studies. Tech. Rep. E-80-4.

Levine, S., 1980. Several measures of trophic structure applicable to complex food webs. J. Theor. Biol., 83: 195–207.

Makarewicz, J.C. and Jones, H.D., 1990. Occurrence of *Bythotrephes cederstromemi* in Lake Ontario offshore waters. J. Great Lakes Res., 16: 143–147.

Mathers, A. and Stewart, T.J., 1990. Smelt abundance and growth in western Lake Ontario. In: Lake Ontario Committee 1990 Annual Meeting, GLFC, Ann Arbour, MI, pp. 467–472.

McWilliam, 1970. Seasonal changes in abundance and reproduction in the opossum shrimp, *Mysis relicta* Loven, in Lake Michigan. M.S. thesis, Univ. Sydney, 94 pp.

Munawar, M., Stadelmann, P. and Munawar, I.F., 1974. Phytoplankton biomass, species composition and primary production at a nearshore and midlake station of Lake Ontario during IFYGL (IFYGL). Proc. 17th Conf. Great Lakes Res., 1974: 629–652.

Munawar, M., Munawar, I.F. and McCarthy, L.H., 1987. Phytoplankton ecology of large eutrophic and oligotrophic lakes of North America: Lakes Ontario and Superior. Arch. Hydrobiol. Beih., 25: 51–96.

Niimi, A.J., 1981. Gross growth efficiency of fish (k_1) based on field observations of annual growth and kinetics of persistent environmental contaminants. Can. J. Fish. Aquat. Sci., 38: 250–253.

O'Gorman, R. and Schneider, C.P., 1986. Dynamics of alewives in Lake Ontario following a mass mortality. Trans Am. Fish. Soc., 115: 1–14.

O'Gorman, R., Bergsted, R.A. and Eckert, T.H., 1987. Prey fish dynamics and salmonine predator growth in Lake Ontario, 1978–84. Can. J. Fish. Aquat. Sci., 44 (Suppl. 2): 390–403.

Olson, R.A., Winter, I.D., Nettles, D.C. and Haynes, J.M., 1988. Resource partitioning in summer by salmonids in south-central Lake Ontario. Trans. Am. Fish. Soc., 117: 552–559.

Park, R.A., O'Neill, R.V., Bloomfield, J.A., Shugart, H.H. Jr., Booth, R.S., Goldstein, R.A., Mankin, J.B., Koonce, J.F., Scavia, D., Adams, M.S., Clesceri, L.S., Colon, E.M., Deltmann, E.H., Hoopes, J.A., Huff, D.D., Katz, S., Kitchell, J.F., Kohberger, R.C., Larow, E.J., McNaught, D.C., Peterson, J.L., Titus, J.E., Weiler, P.R., Wilkinson, J.W. and Zahorcak, C.S., 1974. A generalized model for simulating lake ecosystems. Simulation, 23: 33–50.

Parker, J.I., 1980. Predation by *Mysis relicta* on *Pontoporeia hoyi*: a food chain link of potential importance in the Great Lakes. J. Great Lakes Res., 6: 164–166.

Patten, B.C., Higashi, M. and Burns, T.P., 1990. Trophic dynamics in ecosystem networks: significance of cycles and storage. Ecol. Model., 51: 1–28.

Rottiers, D.V. and Tucker, R.M., 1982. Proximate composition and caloric content or eight Lake Michigan fishes. U.S. Fish. Wildl. Serv. Tech. Pap. 108.

Rutledge, R.W., Bacore, B.L. and Muholland, R.J., 1976. Ecological stability: an information theory viewpoint. J. Theor. Biol., 57: 355–371.

Sandeman, I.M. and Lasenby, D.C., 1980. The relationship between ambient oxygen concentration temperature, body weight, and oxygen consumption for *Mysis relicta* (Malacostraca: Mysidacea). Can. J. Zool., 58: 1032–1036.

Savoie, P.J. and Letendre, G.C., 1991. Lake Ontario stocking and marking program for 1990. In: Lake Ontario Fisheries Unit, 1990 Annual Report, LOA 91.1, pp. 17.1–17.28.

Scavia, D., 1980. An ecological model of Lake Ontario. Ecol. Model., 8: 49–78.

Scavia, D., Bloomfield, J.A., Fisher, J.S., Nagy, J. and Park, R.A., 1974. Documentation of CLEANX: a generalized model for simulating the open-water ecosystems of lakes. Simulation, 23: 51–56.

Schoenly, K. and Cohen, J.E., 1991. Temporal variation in food web structure: 16 empirical cases. Ecol. Monogr., 61: 267–298.

Sells, D.W., 1982. Size-frequency estimates of secondary production by *Mysis relicta* in Lakes Michigan and Huron. Hydrobiologia, 93: 69–78.

Semenchenko, V.P., 1979. Adaptive changes in the metabolism of the relict amphipod *Pontoporeia affinis* Lindstr. at different temperatures (in Russian). Zh. Obshch. Biol., 40: 740–745.

Shea, M.A. and Makarewicz, J.C., 1989. Production, biomass, and trophic interactions of *Mysis relicta* in Lake Ontario. J. Great Lakes Res., 15: 223–232.

Sonzogni, W.C., Robertson, A. and Beeton, A.M., 1983. Great Lakes management: ecological factors. Environ. Manage., 7: 531–542.

Stadelmann, P., Moore, J.E. and Pickett, E., 1974. Primary production in relation to temperature structure, biomass concentration, and light conditions at an inshore and offshore station in Lake Ontario. J. Fish. Res. Board Can., 31: 1215–1232.

Stewart, D.J. and Binkowski, F.P., 1986. Dynamics of consumption and food conversion by Lake Michigan alewives: energetics-modeling synthesis. Trans. Am. Fish. Soc., 115: 643–661.

Stewart, D.J. and Ibarra, M., 1991. Predation and production by salmonine fishes in Lake Michigan, 1978–88. Can. J. Fish. Aquat. Sci., 48: 909–922.

Stewart, D.J., Weininger, D., Rottier, D.V. and Edsall, T.A., 1983. An energetics model for lake trout, *Salvenlinus namaycush*: application to the Lake Michigan population. Can. J. Fish Aquat. Sci., 40: 681–698.

Strayer, D. and Likens, G.E., 1986. Energy budget for the zoobenthos of Mirror Lake, New Hampshire. Ecology, 67: 303–313.

Thomann, R.V. and Connolly, J.P., 1984. Model of PCB in the Lake Michigan lake trout food chain. Environ. Sci. Technol., 18: 65–71.

Ulanowicz, R.E., 1983. Identifying the structure of cycling in ecosystems. Math. Biosci., 65: 219–237.

Ulanowicz, R.E., 1984. Community measures of marine food networks and their possible applications. In: M.J.R. Fasham (Editor), Flows of Energy and Materials in Marine Ecosystems. Plenum Publishing New York, NY, pp. 23–47.

Ulanowicz, R.E., 1986. Growth and Development: Ecosystems Phenomenology. Springer-Verlag, New York, NY, 203 pp.

Ulanowicz, R.E., 1989. A generic simulation model for treating incomplete sets of data. In: F. Wulff, J.G. Field, K.H. Mann (Editors), Network Analysis in Marine Ecology. Springer-Verlag, Berlin, pp. 84–89.

Ulanowicz, R.E., 1995. Ecosystem trophic foundations: Lindeman Exonerata. In: B.C. Patten and S.E. Jorgensen (Editors), Complex Ecology. Prentice Hall, Engelwood Cliffs, NJ, pp. 549–560.

Ulanowicz, R.E. and Kay, J.J., 1991. A Package for the analysis of ecosystem flow networks. Environ. Software, 6: 131–142.

Ulanowicz, R.E. and Kemp, W.M., 1979. Toward canonical trophic aggregations. Am. Nat., 114: 871–883.

Ulanowicz, R.E. and Norden, J., 1990. Symmetrical overhead in flow networks. Int. J. Systems Sci., 21: 429–437.

Ulanowicz, R.E. and Wulff, F., 1991. Comparing ecosystem structures: The Chesapeake Bay and the Baltic Sea. In: J. Cole, G. Lovett and S. Findlay (Editors), Comparative Analyses of Ecosystems: Patterns, Mechanisms and Theories. Springer Verlag, pp. 140–166.

Vollenweider, R.A., Munawar, M. and Stadelmann, P., 1974. A comparative review of phytoplankton and primary production in the Laurentian Great Lakes. J. Fish. Res. Board Can., 31: 739–762.

Warren, C.E. and Davis, G.E., 1967. Laboratory studies on the feeding, bioenergetics, and growth of fish. In: S.D. Gerking (Editor), The Biological Basis of Freshwater Fish Production. Blackwell Scientific Publications, pp. 175–214.

Welch, H.E., 1968. Relationships between assimilation efficiencies and growth efficiencies for aquatic consumers. Ecology, 49: 755–759.

Wells, L., 1980. Food of alewives, yellow perch, spottail shiners, trout-perch and slimy and forhorn sculpins in southeastern Lake Michigan. U.S. Fish. Wildl. Serv. Tech. Pap. 98.

Wismer, D.A., 1983. A preliminary report on the western Lake Ontario salmonid survey, 1983. Lake Ontario Fisheries Assessment Unit, Ontario Ministry of Natural Resources Report No. 84-4, 35 pp.